VEVOR®

TOUGH TOOLS, HALF PRICE

Technical Support and E-Warranty Certificate www.vevor.com/support

FORKLIFT SEATS

USER MANUAL

We continue to be committed to provide you tools with competitive price.
"Save Half", "Half Price" or any other similar expressions used by us only represents an estimate of savings you might benefit from buying certain tools with us compared to the major top brands and does not necessarily mean to cover all categories of tools offered by us. You are kindly reminded to verify carefully when you are placing an order with us if you are actually saving half in comparison with the top major brands.

VEVOR®

TOUGH TOOLS, HALF PRICE

FORKLIFT SEATS

Model: TY-B28-1

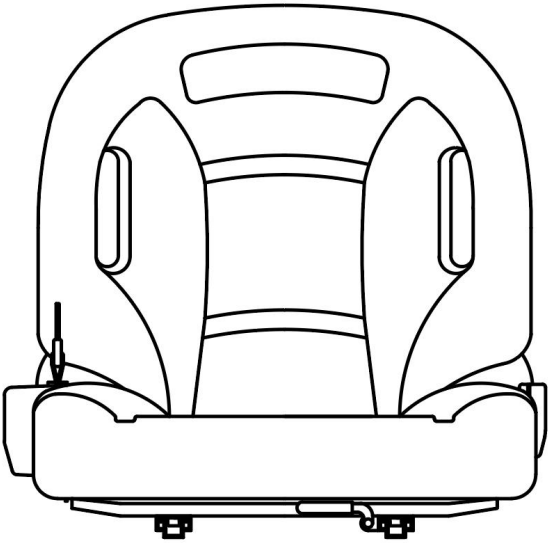

NEED HELP? CONTACT US!

Have product questions? Need technical support? Please feel free to contact us:

Technical Support and E-Warranty Certificate
www.vevor.com/support

This is the original instruction, please read all manual instructions carefully before operating. VEVOR reserves a clear interpretation of our user manual. The appearance of the product shall be subject to the product you received. Please forgive us that we won't inform you again if there are any technology or software updates on our product.

IMPORTANT SAFEGUARDS

Read and understand this entire manual before assembling, installing, operating, or servicing this product. Failure to follow these warnings and instructions can cause death, personal injury or damage to valuable property.

1. While assembling and using this product, keep work area clean and well-lighted, and keep spectators and children out of the work area.
2. Assemble only according to the seat parameter. Improper assembly will cause hazards.
3. Use as intended only.
4. Keep anyone not wearing the appropriate safety equipment away from the work area.
5. Flammable: Keep away from open flame. This product will ignite and burn if brought into contact with an open flame.
6. Keep away from sharp points,blades and other items,so as not to scratch the product.
7. Control the forklift seat, personal movement, and the work environment to avoid personal injury or damage to the tool.

1) Do not operate any tool when tired or under the influence of drugs, alcohol or medications.

2) Do not overreach when operating the tool. Proper balance enables better control in unexpected situations.

SAVE THESE INSTRUCTIONS

SPECIFICATIONS

Model	TY-B28-1
Product Size	570*560*550mm
Color	Black
Safety switch voltage	12/24/36/48V

Instructions

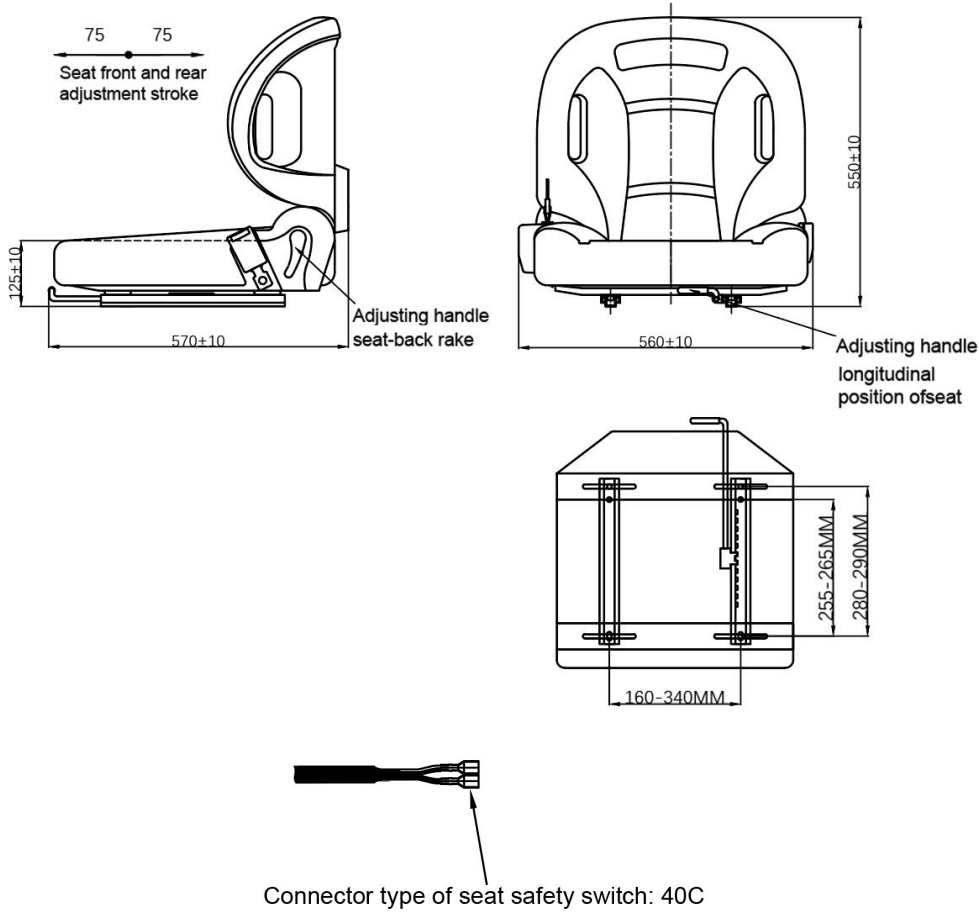

Seat parameter

1. Adjustable range of front and rear seats is 150mm.
2. The Angle of the backrest can be adjusted from 70° to 110° .
3. The transverse installation size can be adjusted, ranging from 160mm to 340mm.
4. Select the right screw holes for vertical installation according to your requirements.
5.The connector type of seat safety switch: 40C.

Correct Disposal :

This product is subject to the provision of European Directive 2012/19/EC. The symbol showing a wheelie bin crossed through indicates that the product requires separate refuse collection in the European Union. This applies to the product and all accessories marked with this symbol. Products marked as such may not be discarded with normal domestic waste, but must be taken to a collection point for recycling electrical and electronic devices

Manufacturer: Shanghaimuxinmuyeyouxiangongsi
Address: Shuangchenglu 803nong11hao1602A-1609shi, baoshanqu, shanghai 200000 CN.
EC REP: E-CrossStu GmbH.
Mainzer Landstr.69, 60329 Frankfurt am Main.
UK REP: YH CONSULTING LIMITED.
C/O YH Consulting Limited Office 147, Centurion House, London Road, Staines-upon-Thames, Surrey, TW18 4AX
Imported to AUS: SIHAO PTY LTD.
1 ROKEVA STREETEASTWOOD NSW 2122 Australia
Imported to USA: Sanven Technology Ltd.
Suite 250, 9166 Anaheim Place, Rancho Cucamonga, CA 91730

VEVOR®

TOUGH TOOLS, HALF PRICE

Technical Support and E-Warranty Certificate

www.vevor.com/support