VEVOR®

TOUGH TOOLS, HALF PRICE

Technical Support and E-Warranty Certificate www.vevor.com/support

SHOWER DOOR

USER MANUAL

We continue to be committed to provide you tools with competitive price.
"Save Half", "Half Price" or any other similar expressions used by us only represents an estimate of savings you might benefit from buying certain tools with us compared to the major top brands and does not necessarily mean to cover all categories of tools offered by us. You are kindly reminded to verify carefully when you are placing an order with us if you are actually saving half in comparison with the top major brands.

VEVOR®
TOUGH TOOLS, HALF PRICE

SHOWER DOOR

MODEL: CNH-EC-S721A CH/ CNH-EC-S721A MB

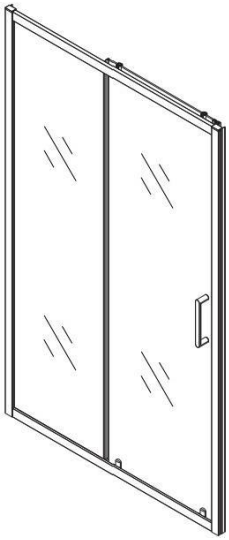

Photo for reference

NEED HELP? CONTACT US!

Have product questions? Need technical support? Please feel free to contact us:
Technical Support and E-Warranty Certificate www.vevor.com/support

This is the original instruction, please read all manual instructions carefully before operating. VEVOR reserves a clear interpretation of our user manual. The appearance of the product shall be subject to the product you received. Please forgive us that we won't inform you again if there are any technology or software updates on our product.

SAFETY INSTRUCTION AND PRECAUTIONS

⚠WARNING Please read this user manual carefully!

Assembly Precautions

1. Carefully check the box for any damages. If damaged, please take a photo for your record and contact our service team for help.
2. It is dangerous if not installed correctly.Fasten all screws, nuts before using it.
3.Please assemble according to these instructions. Improper assembly can create hazards.
4. Wear ANSI-approved safety goggles and heavy-duty work gloves during assembly.
5.Keep the assembly area clean and well-lit.
6. Please do not discard the box until after you have finished assembling the shower door.
7.Do not assemble when tired or when under the influence of alcohol, drugs or medication.
8.Do not alter this product in any manner.
9.The box contains some small components; please place them properly before installation to keep them away from kids and ensure safety.

Installation instructions

1.Dimensional measurement

Before installing the bathroom door, it is necessary to first measure the size of the door correctly. Firstly, measure the width and height of the door opening to determine the dimensions of the door leaf and frame. It should be noted that bathroom doors require more sealing than regular doors, so there may be some special size requirements. It is important to measure carefully to ensure that the door size meets the requirements.

2. Door frame installation

When installing the door frame, attention should be paid to the verticality and levelness of the door frame. The verticality of the door frame can be achieved by installing support blocks and adjusting the horizontal and vertical alignment, while the levelness of the door frame needs to be calibrated on the basis of installing a leveling instrument. In addition, in order to increase the waterproof performance of the door frame, it is necessary to perform sealing treatment at the bottom and side of the door frame, fill the gaps with waterproof adhesive, and install waterproof film on the inside of the door frame.

After installation, you can choose to stick explosion-proof film on the glass door. Even if the glass door breaks, its glass debris will not splash to various parts of the bathroom, not only minimizing the probability of accidental injury, but also facilitating people's cleaning.

NOTE: We recommend two people to assemble the shower door. It will need to take about an hour,

Please check the parts carefully according to the parts list. If you are missing any parts, please contact our customer service department.

Part List

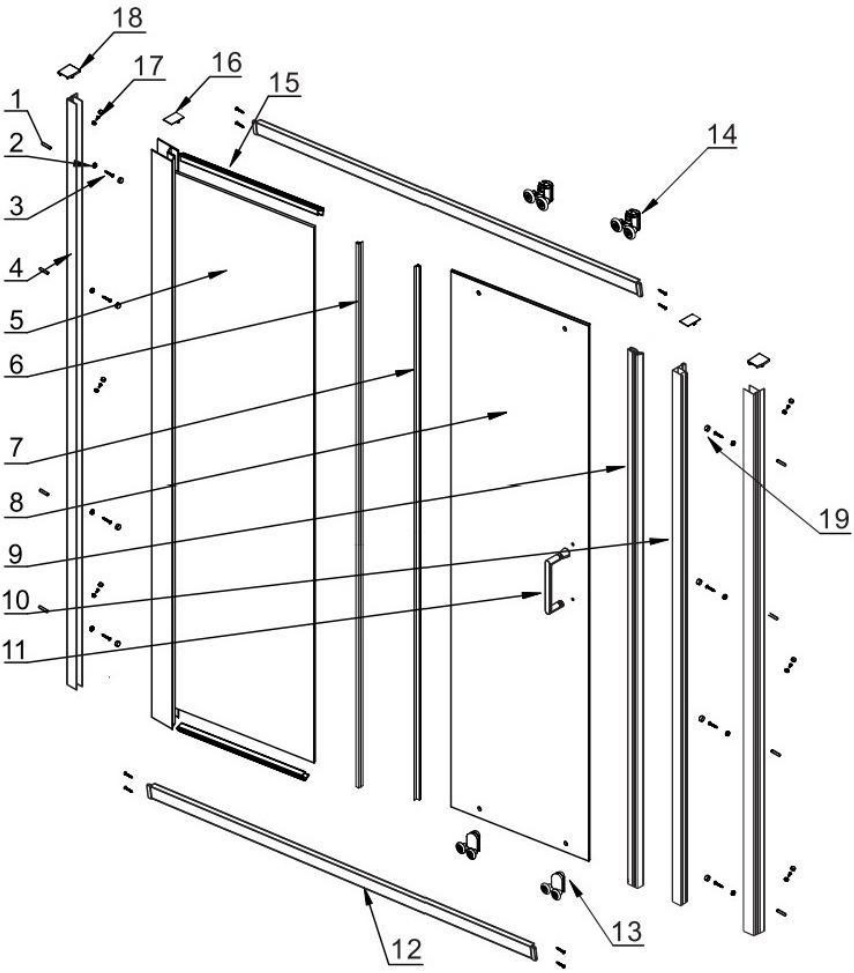

1  X8	2  X14	3  ST4x30 X16	4 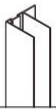 X2	5  X1
6 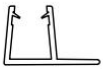 X1	7 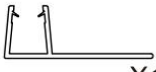 X1	8 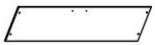 X1	9  X1	10 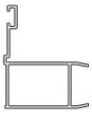 X1
11  X1	12 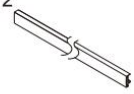 X2	13  X2	14  X2	15  X2
16  X2	17  St4x16 X6	18  X2	19  X14	

Tools Required:

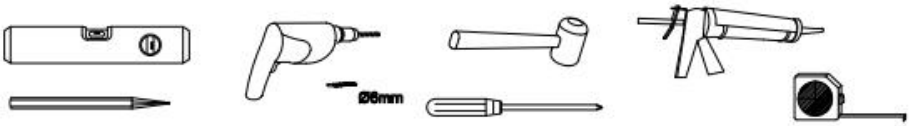

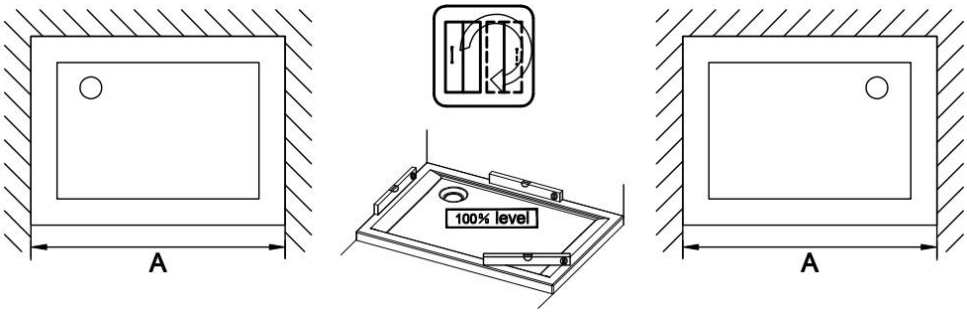

The shower door in the above listed sizes can be installed on the floor or on the shower plate that must be 100% balanced.

Install Step

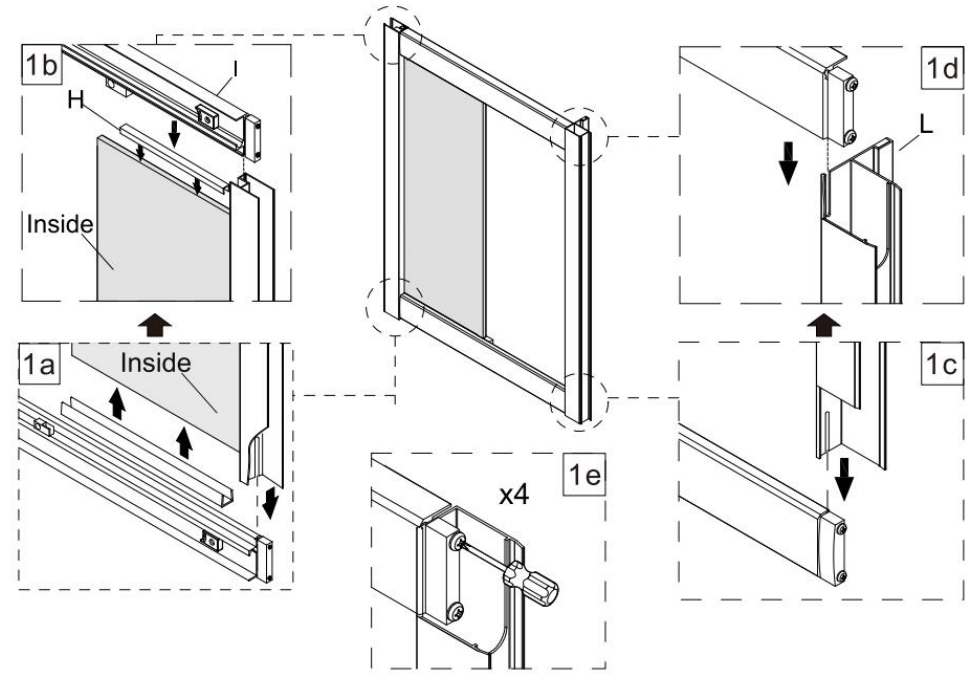

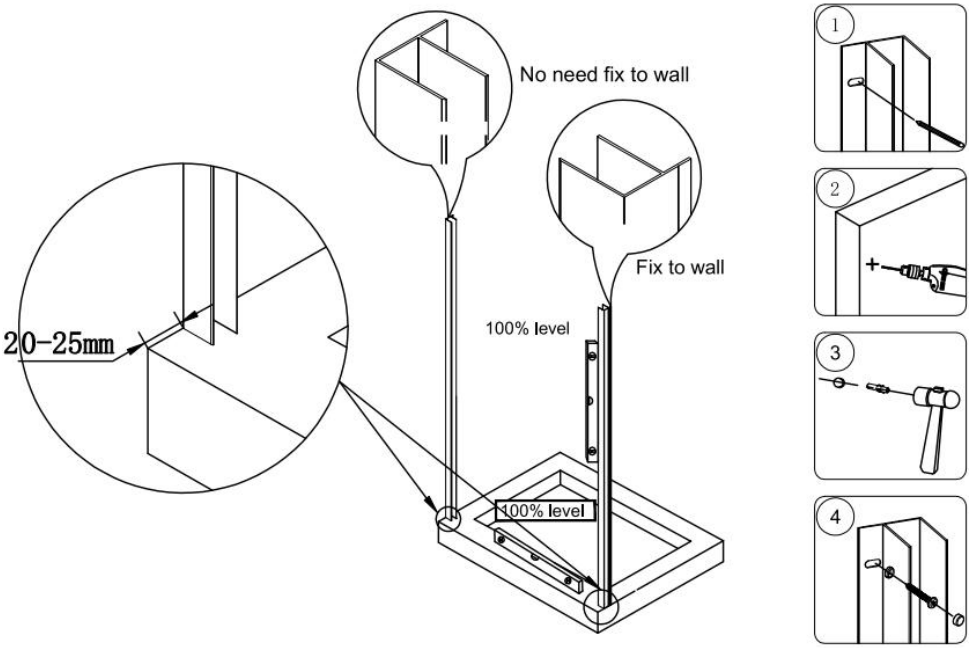

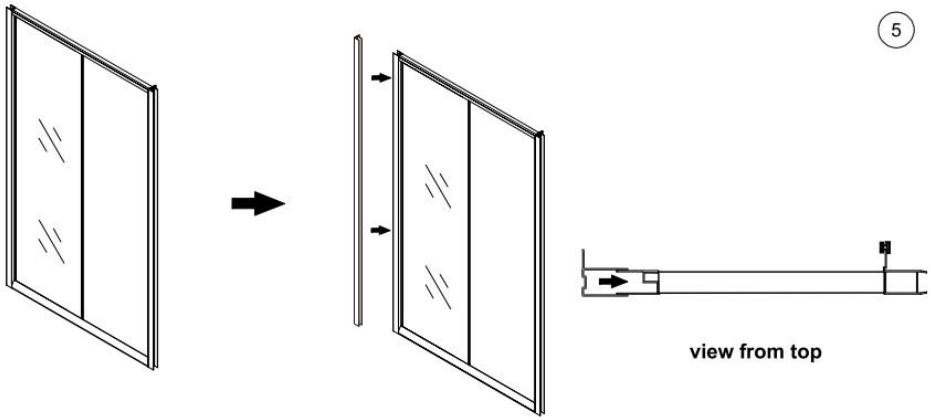

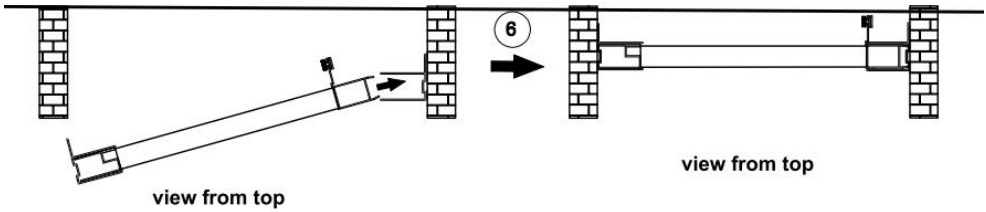

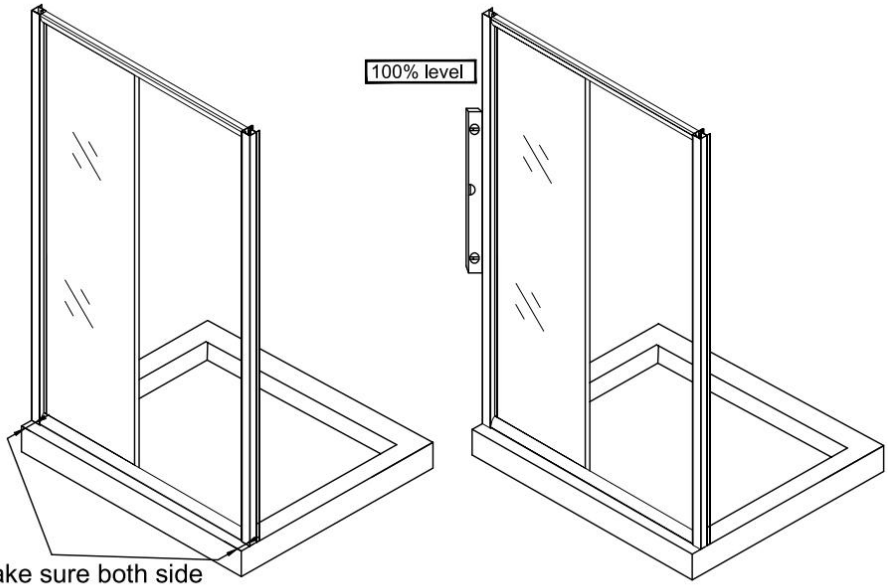

make sure both side
are the same

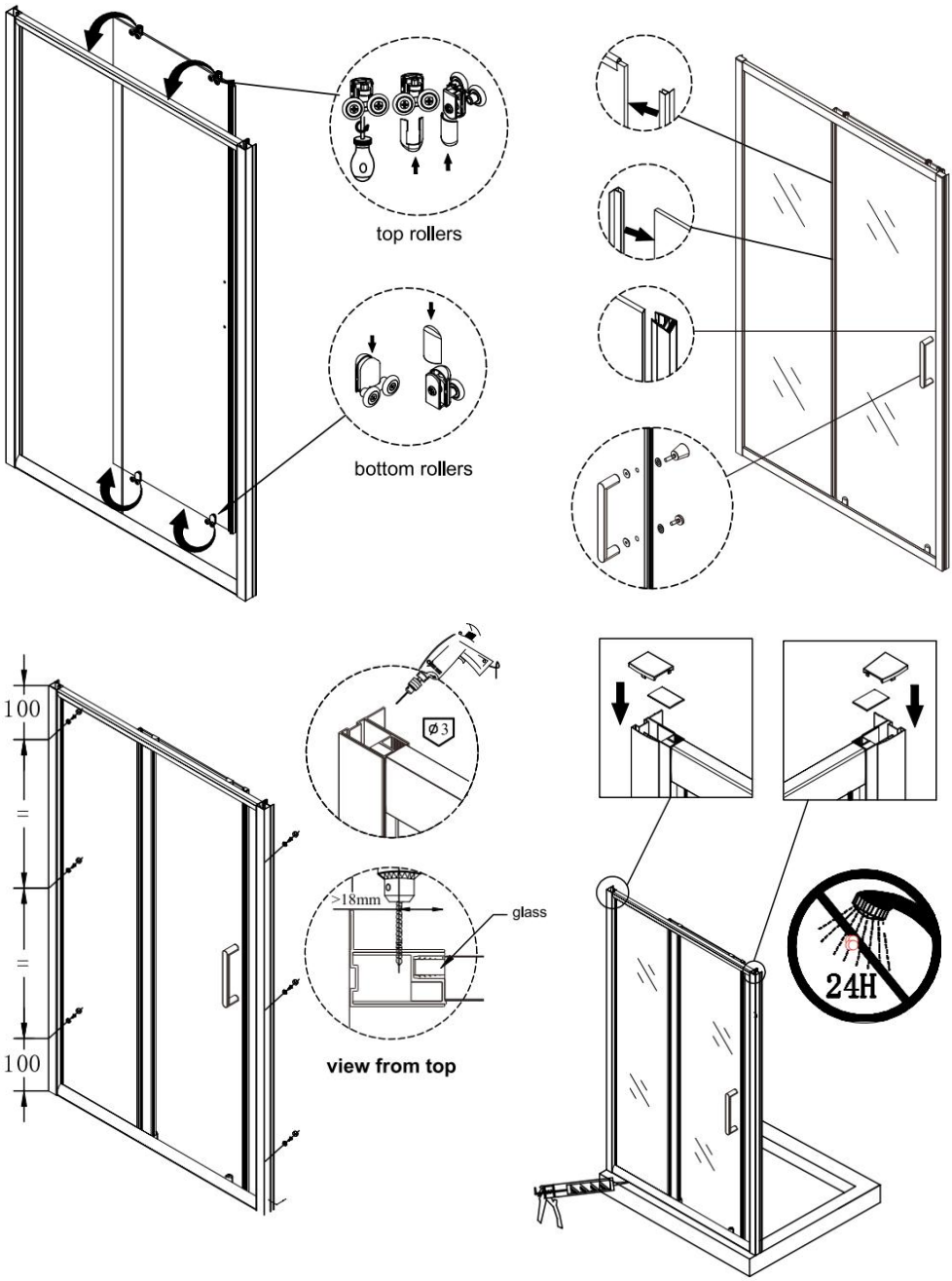

Note: Before applying glass glue, make sure all surfaces are clean and dry, and let it dry for 24 hours after finishing

Address: Shuangchenglu 803nong11hao1602A-1609shi, baoshanqu, shanghai 200000 CN.

Imported to AUS: SIHAO PTY LTD. 1 ROKEVA STREETEASTWOOD NSW 2122 Australia

Imported to USA: Sanven Technology Ltd. Suite 250, 9166 Anaheim Place, Rancho Cucamonga, CA 91730

EC	REP

E-CrossStu GmbH
Mainzer Landstr.69, 60329 Frankfurt am Main.

UK	REP

YH CONSULTING LIMITED.
C/O YH Consulting Limited Office 147, Centurion House, London Road, Staines-upon-Thames, Surrey, TW18 4AX

VEVOR®

TOUGH TOOLS, HALF PRICE

Technical Support and E-Warranty Certificate

www.vevor.com/support