VEVOR®

TOUGH TOOLS, HALF PRICE

Technical Support and E-Warranty Certificate www.vevor.com/support

Mounted Cat Shelf Installation Instructions

We continue to be committed to provide you tools with competitive price.
"Save Half", "Half Price" or any other similar expressions used by us only represents an estimate of savings you might benefit from buying certain tools with us compared to the major top brands and does not necessarily mean to cover all categories of tools offered by us. You are kindly reminded to verify carefully when you are placing an order with us if you are actually saving half in comparison with the top major brands.

VEVOR®

TOUGH TOOLS, HALF PRICE

Mounted Cat Shelf

Model: SSGQK-02

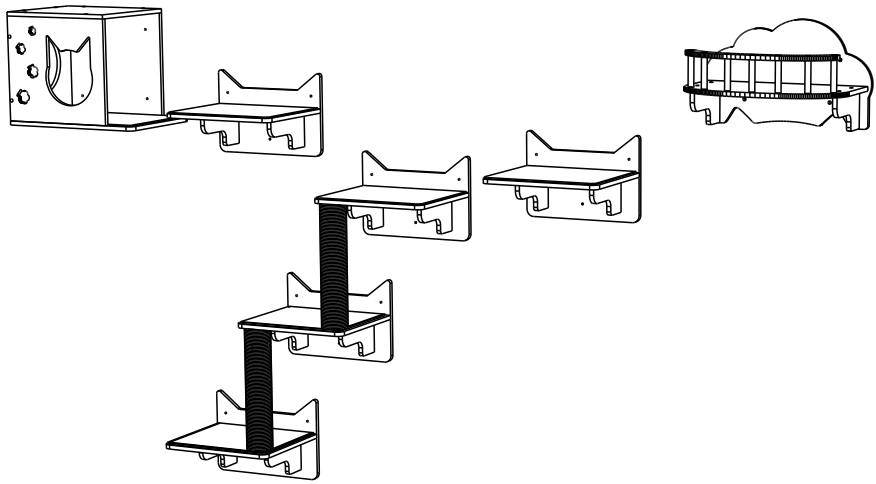

NEED HELP? CONTACT US!

Have product questions? Need technical support? Please feel free to contact us:

Technical Support and E-Warranty Certificate
www.vevor.com/support

This is the original instruction, please read all manual instructions carefully before operating. VEVOR reserves a clear interpretation of our user manual. The appearance of the product shall be subject to the product you received. Please forgive us that we won't inform you again if there are any technology or software updates on our product.

SPECIFICATIONS

Model	SSGQK-02
Color	Nature

COMPONENTS

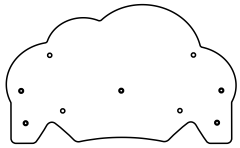 Ax1	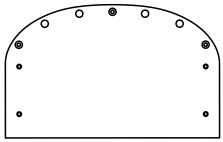 Bx1	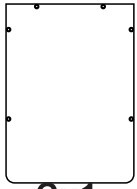 Cx1
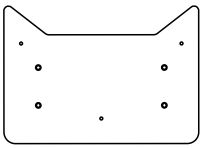 Dx5	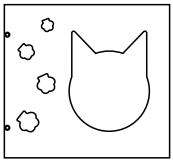 Ex1	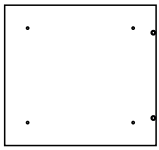 Fx1
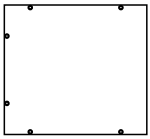 Gx1	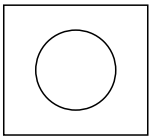 Hx1	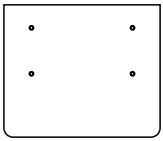 Ix2
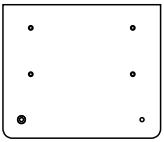 Jx1	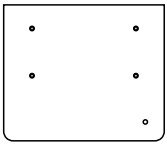 Kx1	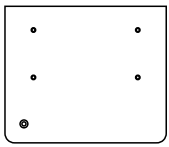 Mx1
* each set of products is equipped with screwdrivers and wrenches		

COMPONENTS

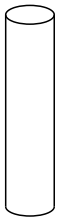 **Nx2**	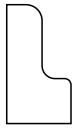 **Ox12**	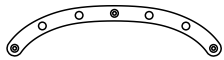 **Px1**
(M4*70) (M6*40) **N1x19** **N2x71**	(M8*35) **N3x4** **N4x4**	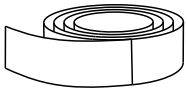 **Vx1**
 T1x19 **T2x19**	(Loop-pile mat) 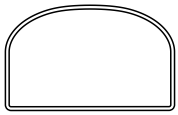 **Qx1**	(Loop-pile mat) 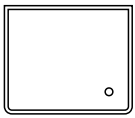 **R1x2**
(Loop-pile mat) 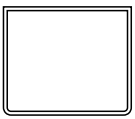 **R2x3**	(Plain velours) 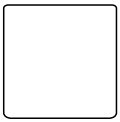 **Sx1**	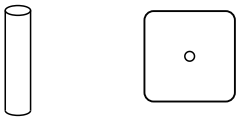 **Tx7** **Ux4**
* each set of products is equipped with screwdrivers and wrenches		

Assembly Instructions

TIPS:

1.The number of screws marked above is the actual number used during installation. When the product is shipped, 1~3 more screws of each type will be given as spares.

2. During the use of the product, children are prohibited from approaching without the company of adults.

3. The edge of the product is a bit sharp, and you need to wear gloves for installation; at the same time, it comes with sandpaper, so you can polish the edge again by yourself; without gloves, be careful when touching the running wheel.

4.Do not tighten the installation screws at once. Tighten the installation screws twice after all screws are aligned

5.It is recommended that two or more people install the device

6.Please use the following tools to install

Tape measure

Scissors

Marker pen

screwdriver

Electric drill

Please mark the position on the wall against the plate, reserve about 30cm distance between the jump platforms, drill the hole and bury the expansion tube
(A 6mm drill bit is used for solid walls and a yellow expansion tube is embedded; a 9mm drill bit is used for hollow walls and a butterfly expansion tube is embedded)

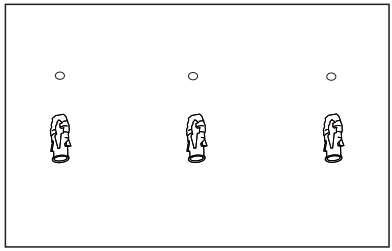

Expansion solenoid

Butterfly solenoid

M4*70

Assembly Instructions

STEP 1

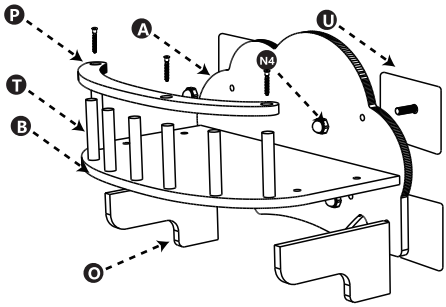

STEP 2

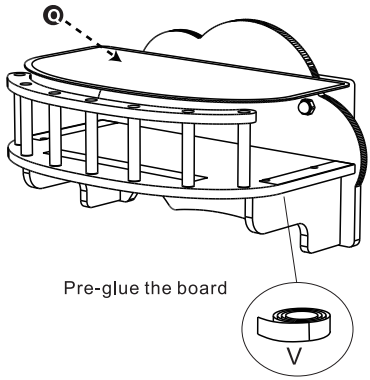

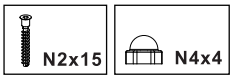

Install the fence table as shown
(note that this part is mounted on the glass wall)

STEP 3

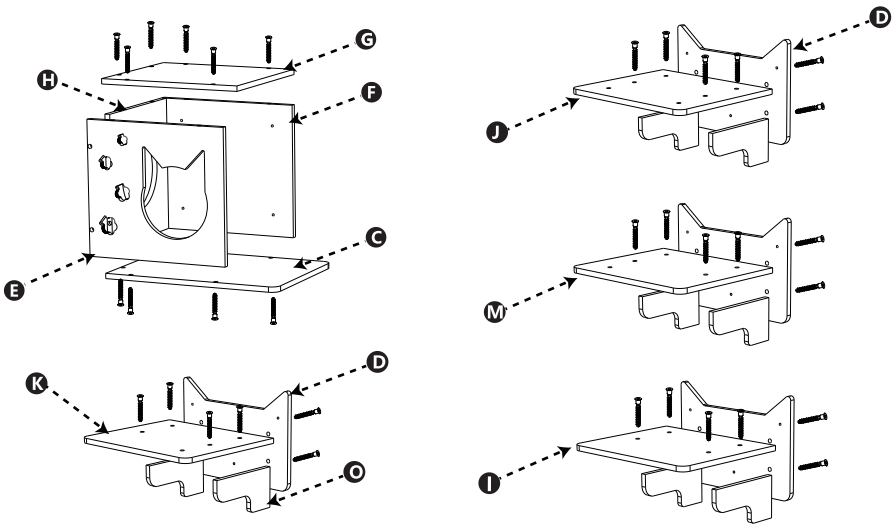

The picture shows a jumping platform and a cat's nest

Assembly Instructions

STEP 4

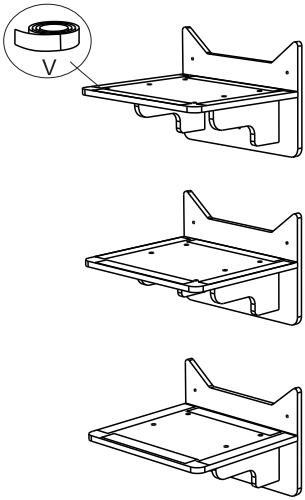

Put back glue on all four sides of the jumps

STEP 5

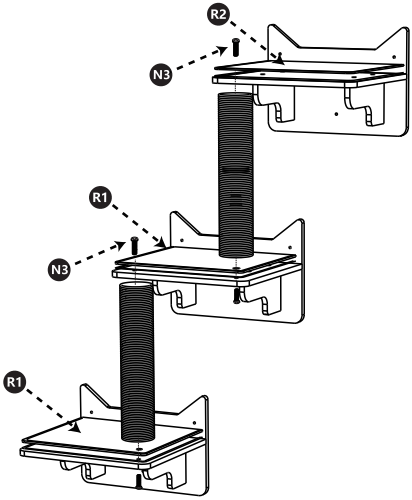

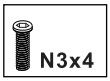

The jumping platform is fixed to the top ring and connected to the pole

STEP 6

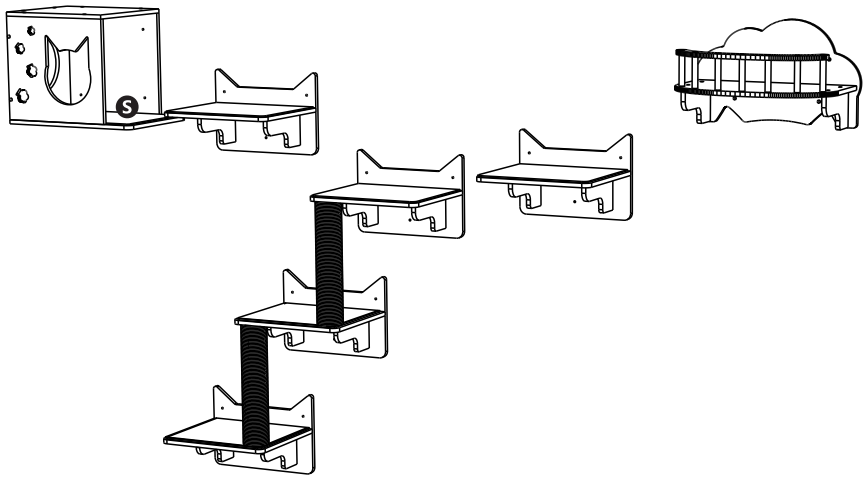

All parts are nailed to the wall
(The installation distance of each component should be within 30cm)

Address: Shuangchenglu 803nong11hao1602A-1609shi, baoshanqu, shanghai 200000 CN.

Imported to AUS: SIHAO PTY LTD, 1 ROKEVA STREETEASTWOOD NSW 2122 Australia

Imported to USA: Sanven Technology Ltd.Suite 250, 9166 Anaheim Place, Rancho Cucamonga, CA 91730

EC	REP

E-CrossStu GmbH.
Mainzer Landstr.69, 60329 Frankfurt am Main.

UK	REP

YH CONSULTING LIMITED.
C/O YH Consulting Limited Office 147, Centurion House, London Road, Staines-upon-Thames, Surrey, TW18 4AX.

VEVOR®

TOUGH TOOLS, HALF PRICE

Technical Support and E-Warranty Certificate

www.vevor.com/support

Tecnico supporto e Certificato di garanzia elettronica Www. vevor. com/supporto

Mensola per gatti montata Installazione Istruzioni

continuiamo a impegnarsi Fornirti strumenti con competitivo e prezzo.

"salva Metà", "Metà prezzo" o qualsiasi altra espressione simile usato da noi rappresenta solo un

stima del tuo risparmio potrebbe trarne beneficio acquisto alcuni strumenti con noi rispetto al maggiore le migliori marche e fa non significa necessariamente coprire tutto categorie di to ols offerto da noi. Voi

Sono si ricorda di verificare attentamente quando Voi Sono collocazione UN ordina con noi se tu Sono effettivamente risparmiando metà dentro confronto con la massima major Marche.

VEVOR®

TOUGH TOOLS, HALF PRICE

Mounted Cat Shelf

Modello: SSGQK-02

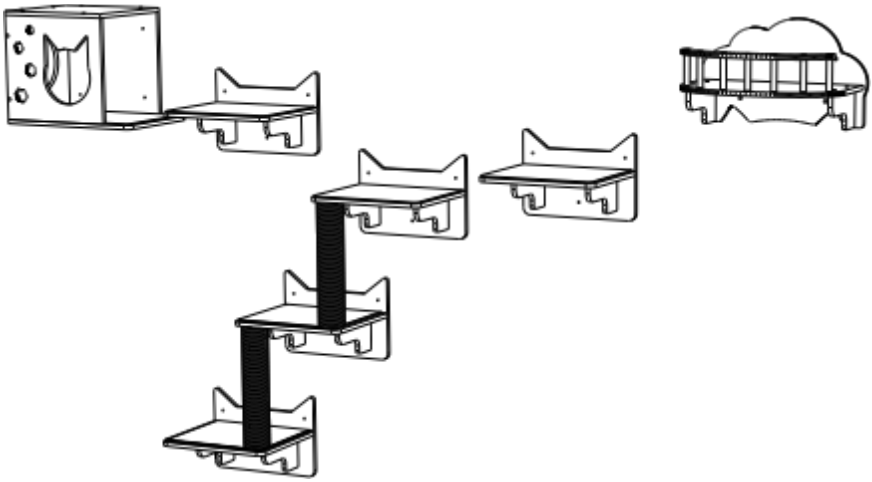

NEED HELP? CONTACT US!

Have product questions? Need technical support? Please feel free to contact us:

Technical Support and E-Warranty Certificate
www.vevor.com/support

This is the original instruction, please read all manual instructions carefully before operating VEVOR reserves a clear interpretation of our user manual. The appearance of the product shall be subject to the product you received. Please forgive us that we won't inform you again if there are any technology or software updates on our product.

SPECIFICHE

Modello	SSGQK-02
Colore	Natura

COMPONENTI

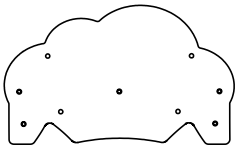 Ascia 1	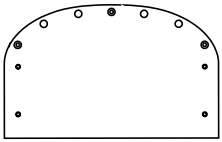 Bx1	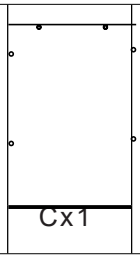 Cx1
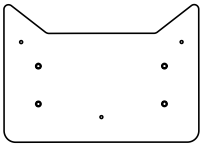 Dx5	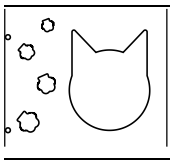 Es1	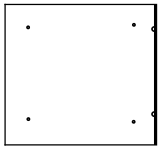 Fx1
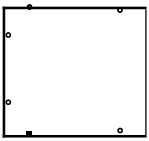 Gx1	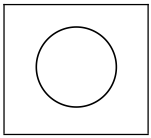 Hx1	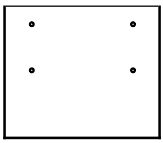 Ix2
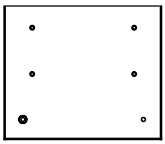 Jx1	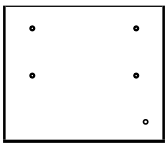 Kx1	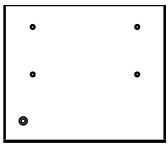 Mx1
*ogni insieme di prodotti s è dotato di cacciaviti e chiavi inglesi		

COMPONENTS

Nx2	Ox12	Px1
(M4*70) N1x19 (M6*40) N2x71	(M8*35) N3x4 N4x4	Vx1
T1x19 T2x19	(Loop-pile mat) Qx1	(Loop-pile mat) R1x2
(Loop-pile mat) R2x3	(Plain velours) Sx1	Tx7 Ux4

* each set of products is equipped with screwdrivers and wrenches

Assemblea Istruzioni

SUGGERIMENTI :

1 . IL numero di viti marchio d Sopra è il effettivo numero utilizzato durante installazione. Quando IL Prodotto viene spedito , 1 ~3 più viti di ciascun tipo volontà Essere dato COME pezzi di ricambio.

2 . Durante IL utilizzo del Prodotto, bambini Sono proibito da avvicinandosi senza IL azienda Di adulti .

3 . Il bordo del Prodotto È UN un po' tagliente , E tu Bisogno indossare i guanti per installazione; allo stesso tempo , viene fornito con carta vetrata, Quindi tu Potere polacco il bordo

Ancora da solo; senza guanti , stai attento Quando toccante IL ruota in corsa .

4 . Non serrare le viti di installazione subito . Stringere il installazione viti due volte dopo tutte le viti sono allineati

5. Si consiglia di farlo due o più persone installano il dispositivo

6 . Per favore utilizza il seguente strumenti da installare

Metro A nastro

forbici

Pennarello

cacciavite

Trapano elettrico

si prega di segnare la posizione sul muro contro la piastra, riservando una distanza di circa 30 cm fra IL piattaforme di salto, perforazione a sinistra buco e seppellire il tubo ionico di espansione

(Trapano A6mm la punta viene utilizzata per pareti solide e un tubo di espansione giallo è incorporato ; un trapano Gmm la punta viene utilizzata per pareti cave e un tubo di espansione a farfalla È incorporato)

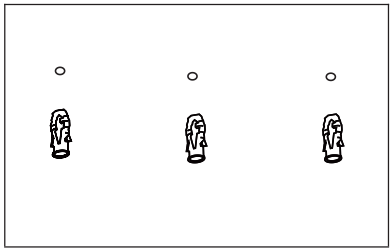

Solenoide di espansione

Farfalla solenoide

M4*70

Assembly Instructions

STEP 1

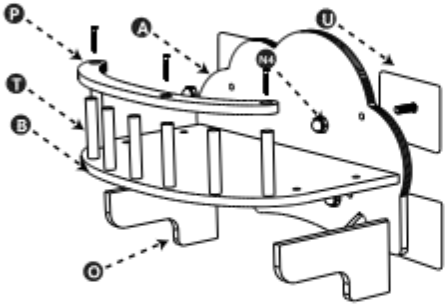

STEP 2

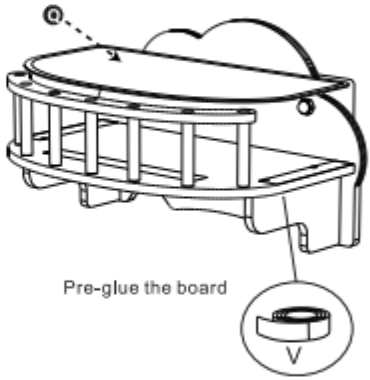

Install the fence table as shown
(note that this part is mounted on the glass wall)

STEP 3

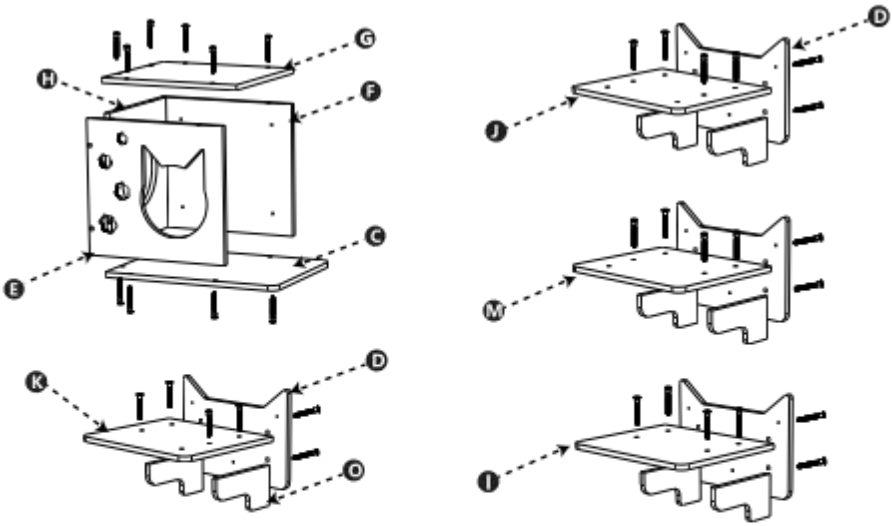

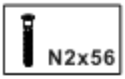

The picture shows a jumping platform and a cat's nest

Assembly Instructions

STEP 4

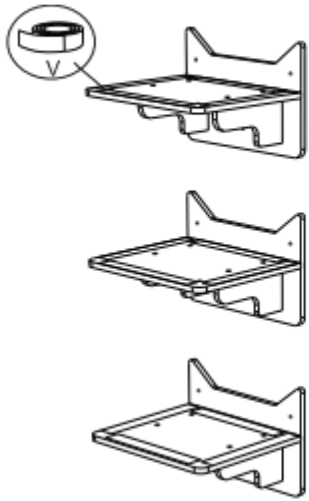

Put back glue on all four sides of the jumps

STEP 5

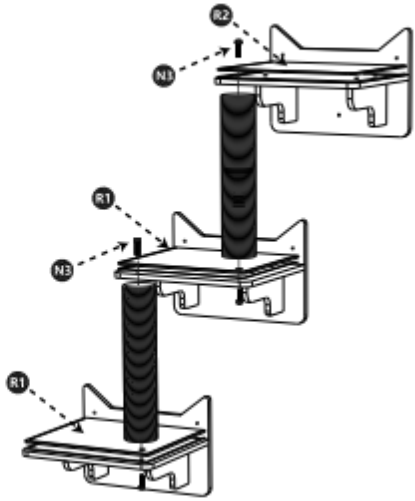

The jumping platform is fixed to the top ring and connected to the pole

STEP 6

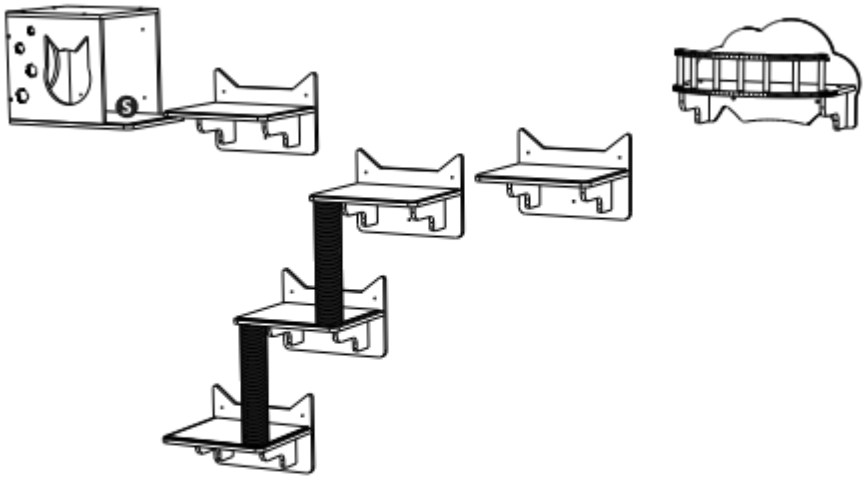

All parts are nailed to the wall
(The installation distance of each component should be within 30cm)

Address: Shuangchenglu 803nong11hao1602A-1609shi, baoshanqu, shanghai 200000 CN.

Imported to AUS: SIHAO PTY LTD, 1 ROKEVA STREETEASTWOOD NSW 2122 Australia

Imported to USA: Sanven Technology Ltd.Suite 250, 9166 Anaheim Place, Rancho Cucamonga, CA 91730

EC	REP

E-CrossStu GmbH.
Mainzer Landstr.69, 60329 Frankfurt am Main.

UK	REP

YH CONSULTING LIMITED.
C/O YH Consulting Limited Office 147, Centurion House, London Road, Staines-upon-Thames, Surrey, TW18 4AX.

VEVOR®

TOUGH TOOLS, HALF PRICE

Supporto tecnico e Certificato di guerra elettronica Www.vevor.com/supporto

VEVOR®

TOUGH TOOLS, HALF PRICE

Techniczny wsparcie i Certyfikat e-gwarancji www.wevor.com/wsparcie

Zamontowana półka dla kota Instalacja Instrukcje

kontynuujemy Być zobowiązany dostarczyć Ci narzędzia z konkurencyjny cena. "ratować Połowa", "Połowa ceny" lub inne podobne wyrażenia używany przez nas oznacza jedynie

oszacowanie oszczędności może z tego skorzystać kupowanie określone narzędzia z nas w porównaniu z majorem najlepsze marki i robi niekoniecznie to znaczy przykryć wszystko kategorie z do ols oferowany przez nas. Ty

Czy Przypominamy, aby dokładnie sprawdzić, kiedy Ty Czy umieszczanie jakiś zamów z nas Jeśli ty Czy faktycznie oszczędza w połowie w porównaniu z czołowym kierunkiem marki.

VEVOR®

TOUGH TOOLS, HALF PRICE

Mounted Cat Shelf

Model: SSGQK-02

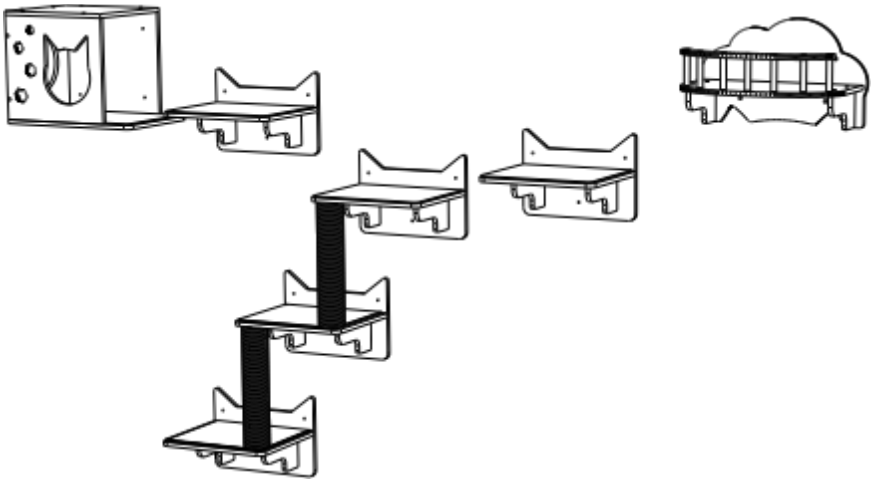

NEED HELP? CONTACT US!

Have product questions? Need technical support? Please feel free to contact us:

Technical Support and E-Warranty Certificate
www.vevor.com/support

This is the original instruction, please read all manual instructions carefully before operating VEVOR reserves a clear interpretation of our user manual. The appearance of the product shall be subject to the product you received. Please forgive us that we won't inform you again if there are any technology or software updates on our product.

SPECYFIKACJE

Model	SSGQK-02
Kolor	Natura

SKŁADNIKI

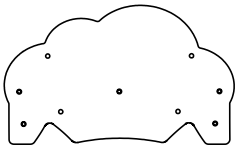 Topór 1	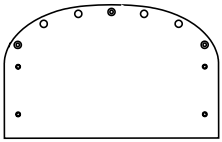 Bx1	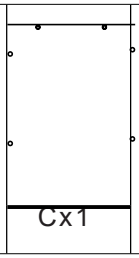 Cx1
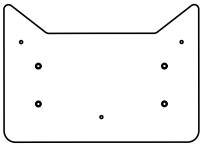 Dx 5	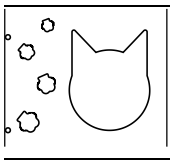 Przykład 1	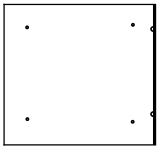 Fx1
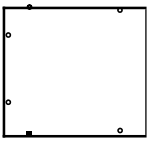 Gx1	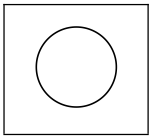 Hx 1	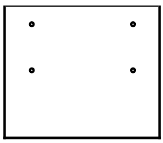 lux 2
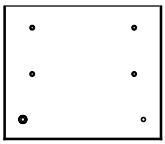 Jx 1	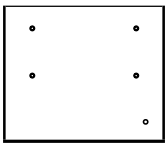 Kx1	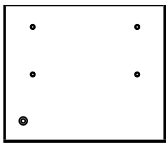 Mx 1
*każdy zestaw produktów s jest wyposażony śrubokręty i klucze		

COMPONENTS

Nx2	Ox12	Px1
(M4*70) N1x19 (M6*40) N2x71	(M8*35) N3x4 N4x4	Vx1
T1x19 T2x19	(Loop-pile mat) Qx1	(Loop-pile mat) R1x2
(Loop-pile mat) R2x3	(Plain velours) Sx1	Tx7 Ux4

* each set of products is equipped with screwdrivers and wrenches

Montaż Instrukcje

PORADY :

1. The liczba śrub Marek D powyżej jest rzeczywisty użyty numer podczas instalacja. Kiedy the produkt jest wysyłany, 1 ~3 więcej śrub każdego wpisz wolę Być dany Jak części zamienne.

2. Podczas the używać z produkt, dzieci Czy zabroniony z zbliżający się bez the firma z dorośli ludzie .

3. Krawędź z produkt Jest A trochę ostry, A ty potrzebować nosić rękawiczki Do instalacja; w tym samym czasie, to przychodzi z papier ścierny, Więc ty Móc polski krawędź

Ponownie sam; bez rękawiczek, bądź ostrożny Kiedy wzruszające the biegnący węgorz. 4. Nie dokręcaj śrub montażowych natychmiast.

Dokręcić instalacja

później dwukrotnie wkręcić wszystkie śruby są wyrównane

5. Zaleca się dwa lub więcej osób instaluje urządzenie

6. Proszę skorzystaj z poniższych narzędzia do zainstalowania

Taśma miernicza nożyczki Marker śrubokręt Wiertarka elektryczna

proszę zaznaczyć pozycję na ścianie względem płyty, zachowując odległość około 30 cm między the platformy do skoków, wiertarka lhte dziura i zakop rurkę jonową ekspansywną (Wiertło A6mm bit służy do ścian pełnych i jest osadzona w żółtej rurze rozprężnej ; wiertarka gmm Bit służy do pustych ścian i rurki rozprężnej motylkowej Jest osadzony)

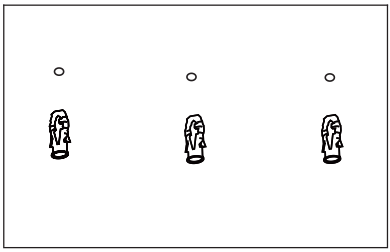

Elektrozawór rozprężny

Motyl Elektrozawór

M4*70

Assembly Instructions

STEP 1

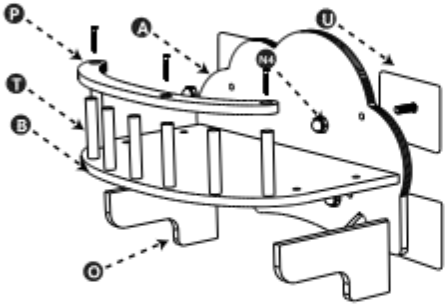

STEP 2

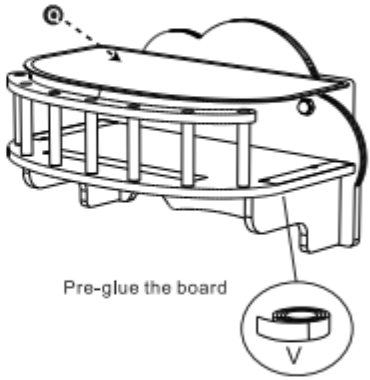

Install the fence table as shown
(note that this part is mounted on the glass wall)

STEP 3

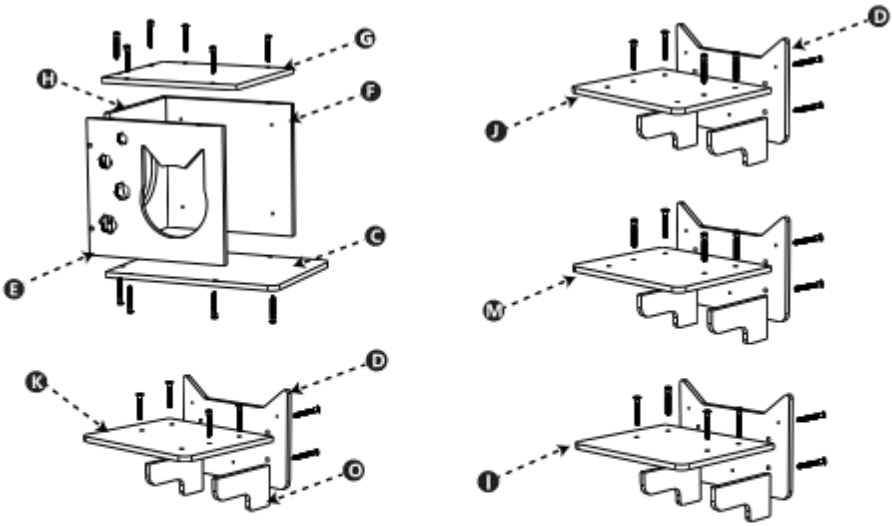

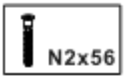

The picture shows a jumping platform and a cat's nest

Assembly Instructions

STEP 4

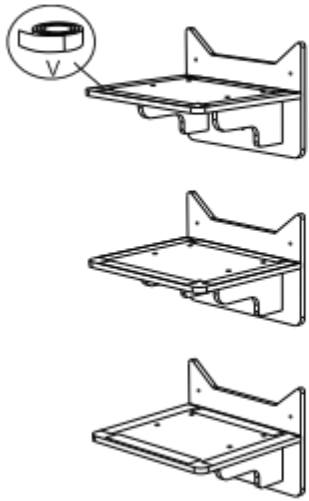

Put back glue on all four sides of the jumps

STEP 5

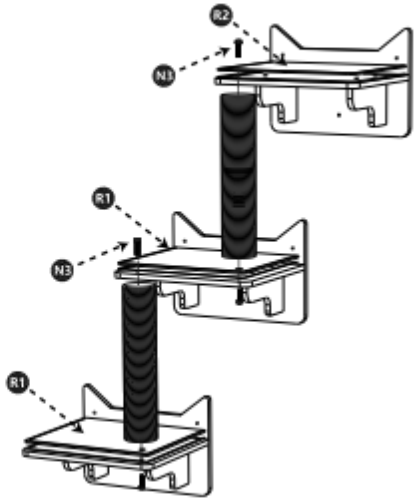

The jumping platform is fixed to the top ring and connected to the pole

STEP 6

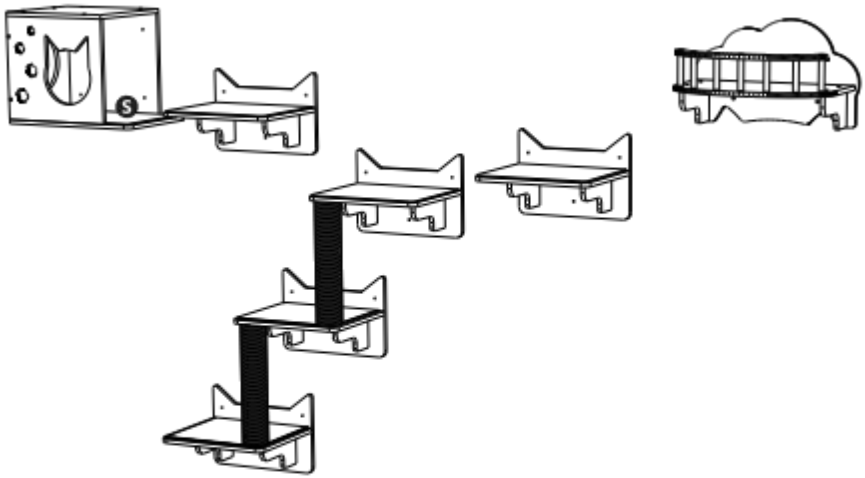

All parts are nailed to the wall
(The installation distance of each component should be within 30cm)

Address: Shuangchenglu 803nong11hao1602A-1609shi, baoshanqu, shanghai 200000 CN.

Imported to AUS: SIHAO PTY LTD, 1 ROKEVA STREETEASTWOOD NSW 2122 Australia

Imported to USA: Sanven Technology Ltd.Suite 250, 9166 Anaheim Place, Rancho Cucamonga, CA 91730

EC	REP

E-CrossStu GmbH.
Mainzer Landstr.69, 60329 Frankfurt am Main.

UK	REP

YH CONSULTING LIMITED.
C/O YH Consulting Limited Office 147, Centurion House, London Road, Staines-upon-Thames, Surrey, TW18 4AX.

VEVOR®

TOUGH TOOLS, HALF PRICE

Wsparcie techniczne i Certyfikat gwarancji

E-war www.vevor.com/wsparcie

VEVOR®

TOUGH TOOLS, HALF PRICE

Technisch Unterstützung und E-Garantiezertifikat Www. vevor. com/support

Montiertes Katzenregal Installation Anweisungen

wir fahren fort sich verpflichten dir zur Verfügung stellen Werkzeuge mit wettbewerbsfähig Preis.

"speichern Halb", "Zum halben Preis" oder andere ähnliche Ausdrücke gebraucht von uns stellt nur eine

Schätzung der Einsparungen, die Sie könnte profitieren von Kauf bestimmte Werkzeuge mit uns im Vergleich zu den großen Top-Marken und tut nicht unbedingt bedeuten alles abdecken Kategorien von zu Werkzeugen angeboten von uns. Du

Sind Bitte überprüfen Sie sorgfältig, wann Du Sind Platzierung ein Bestellen mit uns wenn du Sind tatsächlich sparen halb in Vergleich mit den Top-Major Marken.

VEVOR®

TOUGH TOOLS, HALF PRICE

Mounted Cat Shelf

Modell: SSGQK-02

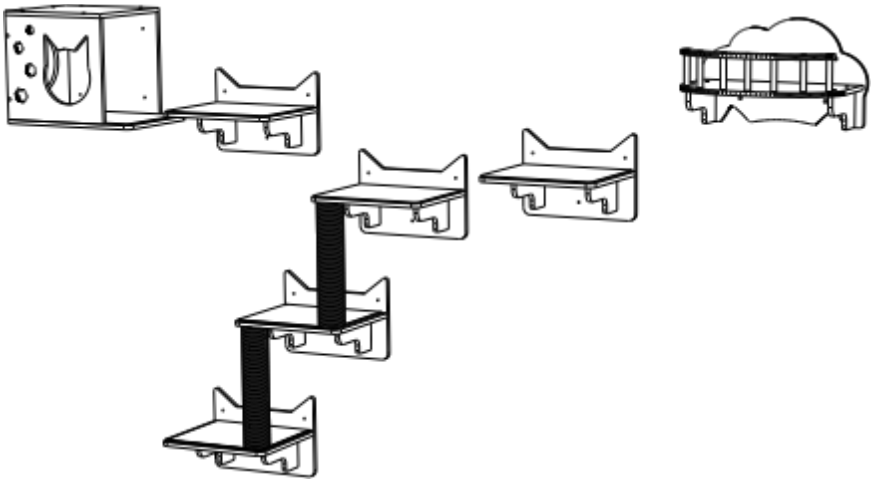

NEED HELP? CONTACT US!

Have product questions? Need technical support? Please feel free to contact us:

Technical Support and E-Warranty Certificate
www.vevor.com/support

This is the original instruction, please read all manual instructions carefully before operating VEVOR reserves a clear interpretation of our user manual. The appearance of the product shall be subject to the product you received. Please forgive us that we won't inform you again if there are any technology or software updates on our product.

SPEZIFIKATIONEN

Modell	SSGQK-02
Farbe	Natur

KOMPONENTEN

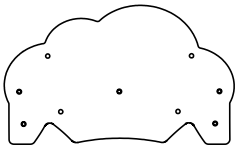 Axt 1	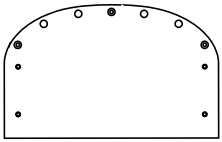 Bx 1	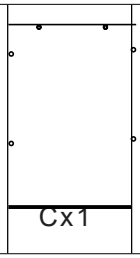 Cx1
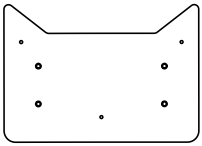 Dx 5	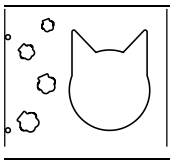 Beispiel 1	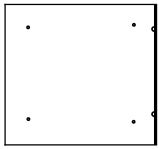 Fx1
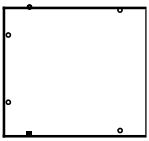 Gx 1	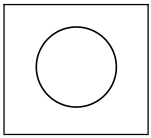 Hx 1	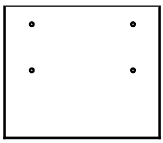 2. Klasse
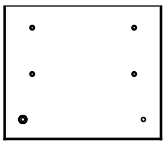 Jx 1	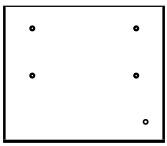 Kx 1	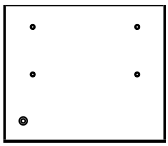 Mx 1
*jede Satz von Produkten ist ausgestattet mit Schraubendreher und Schraubenschlüssel		

COMPONENTS

Nx2	Ox12	Px1
(M4*70) N1x19 (M6*40) N2x71	(M8*35) N3x4 N4x4	Vx1
T1x19 T2x19	(Loop-pile mat) Qx1	(Loop-pile mat) R1x2
(Loop-pile mat) R2x3	(Plain velours) Sx1	Tx7 Ux4

* each set of products is equipped with screwdrivers and wrenches

Montage Anweisungen

TIPPS :

1 . Der Anzahl Schrauben Marke D über ist der tatsächlich verwendete Nummer während

Installation. Wann Die Produkt Wird versandt , 1 ~3 mehr Schrauben von jedem

Typ wird Sei gegeben als Ersatzteile.

2 . Während Die verwenden des Produkt, Kinder Sind verboten aus nähert sich

ohne Die Unternehmen von Erwachsene .

3 . Die Kante des Produkt Ist A bisschen scharf , Und du brauchen Handschuhe tragen für

Installation; gleichzeitig , Es kommt mit Sandpapier, Also du dürfen Polieren die Kante

wieder alleine; ohne Handschuhe , Seien Sie vorsichtig Wann berührend Die

Laufrad . 4 . Ziehen Sie die Montageschrauben nicht fest auf einmal .

Ziehen Sie die Installation

Schrauben zweimal nach Alle Schrauben Sind ausgerichtet

5. Es wird empfohlen, dass zwei oder mehr Leute installieren das Gerät

6 . Bitte verwenden Sie die folgenden Werkzeuge zur Installation

Maßband

Schere

Markierstift

Schraubendreher

Bohrmaschine

Bitte markieren Sie die Position an der Wand gegenüber der Platte und lassen Sie ca. 30 cm Abstand. zwischen Die Sprungplattformen, Bohrer Ihte Loch und Vergraben Sie das Expansionsrohr

(Ein 6mm Bohrer Für Massivwände wird ein Bohrer verwendet, in den ein gelbes Expansionsrohr eingebettet ist ; ein GMM-Bohrer Der Bohrer wird für Hohlwände und Butterfly-Expansionsrohre verwendet. Ist eingebettet)

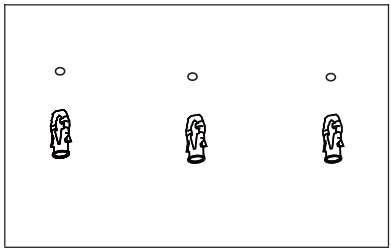

Expansion smagnet

Schmetterling Magnet

M4*70

Assembly Instructions

STEP 1

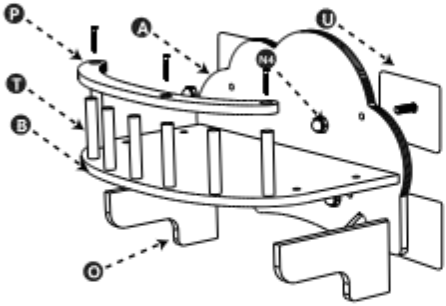

STEP 2

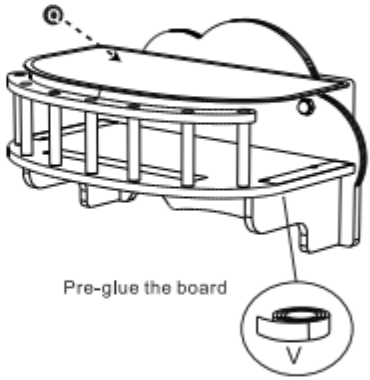

Install the fence table as shown
(note that this part is mounted on the glass wall)

STEP 3

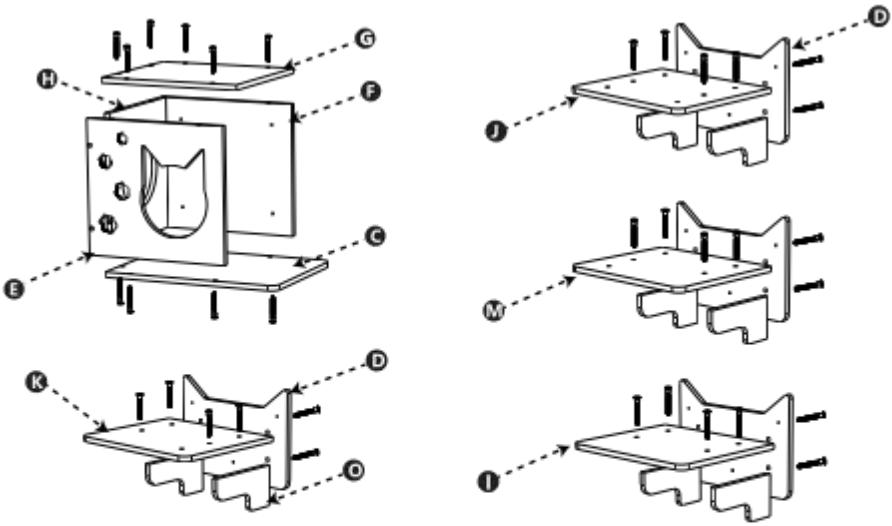

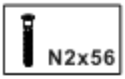

The picture shows a jumping platform and a cat's nest

Assembly Instructions

STEP 4

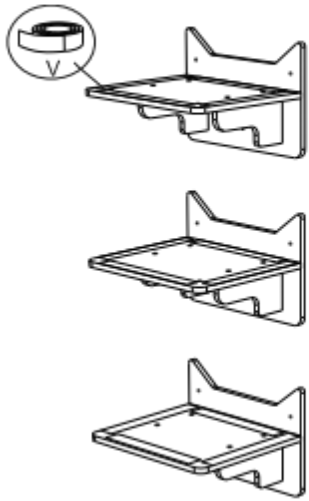

Put back glue on all four sides of the jumps

STEP 5

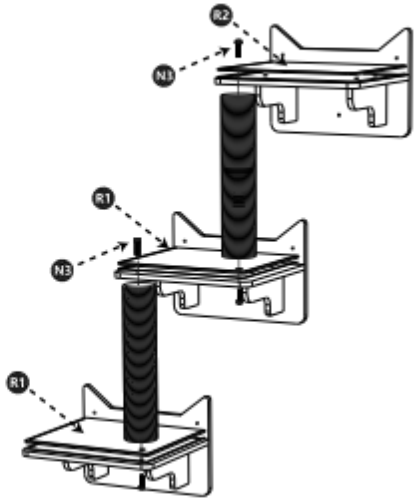

The jumping platform is fixed to the top ring and connected to the pole

STEP 6

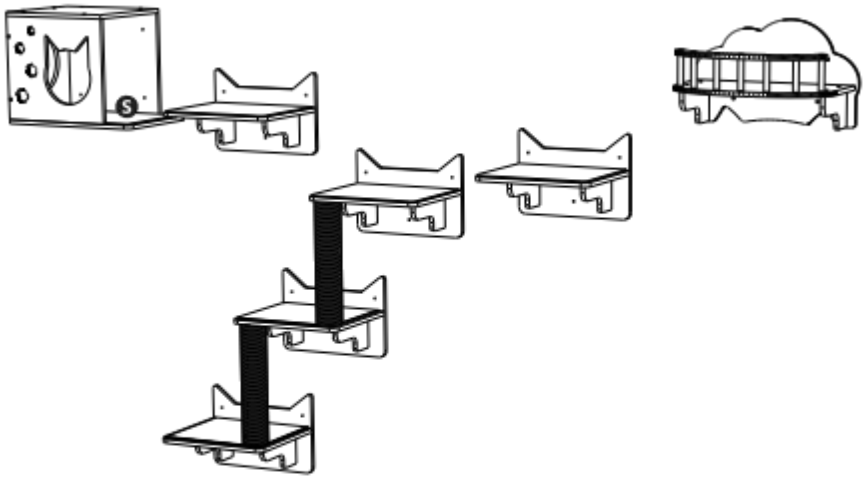

All parts are nailed to the wall
(The installation distance of each component should be within 30cm)

Address: Shuangchenglu 803nong11hao1602A-1609shi, baoshanqu, shanghai 200000 CN.

Imported to AUS: SIHAO PTY LTD, 1 ROKEVA STREETEASTWOOD NSW 2122 Australia

Imported to USA: Sanven Technology Ltd.Suite 250, 9166 Anaheim Place, Rancho Cucamonga, CA 91730

EC	REP

E-CrossStu GmbH.
Mainzer Landstr.69, 60329 Frankfurt am Main.

UK	REP

YH CONSULTING LIMITED.
C/O YH Consulting Limited Office 147, Centurion House, London Road, Staines-upon-Thames, Surrey, TW18 4AX.

VEVOR®

TOUGH TOOLS, HALF PRICE

Technischer Support und E-Garantie - Zertifikat www.vevor.com/support

VEVOR®

TOUGH TOOLS, HALF PRICE

Technique soutien et Certificat de garantie électronique Www. vevor. com/support

Étagère pour chat montée Installation Instructions

nous continuons à être engagé à vous fournir outils avec compétitif prix. "sauvegarder Moitié", "Moitié prix" ou toute autre expression similaire utilisé par nous ne représente qu'un estimation des économies que vous pourrait bénéficier de achat certains outils avec nous par rapport aux majors grandes marques et fait ne veut pas nécessairement dire couvrir tout catégories des outils offert par nous. Toi sont nous vous rappelons de vérifier soigneusement quand toi sont placement un commander avec nous si tu sont en fait, j'économise à moitié dedans comparaison avec le top major marques.

VEVOR®

TOUGH TOOLS, HALF PRICE

Mounted Cat Shelf

Modèle : SSGQK-02

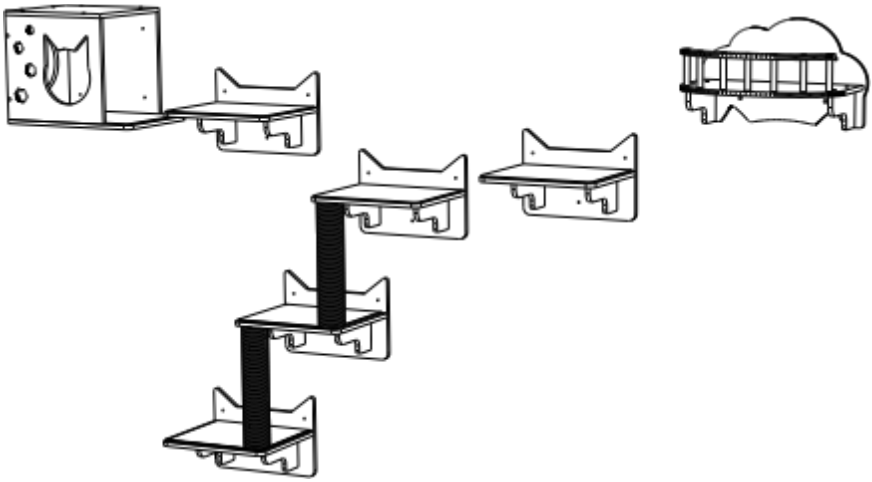

NEED HELP? CONTACT US!

Have product questions? Need technical support? Please feel free to contact us:

Technical Support and E-Warranty Certificate
www.vevor.com/support

This is the original instruction, please read all manual instructions carefully before operating VEVOR reserves a clear interpretation of our user manual. The appearance of the product shall be subject to the product you received. Please forgive us that we won't inform you again if there are any technology or software updates on our product.

CARACTÉRISTIQUES

Modèle	SSGQK-02
Couleur	Nature

COMPOSANTS

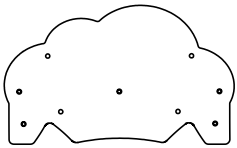 Hache 1	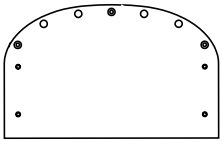 Boîte 1	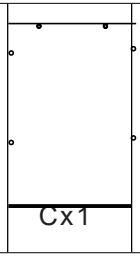 Cx1
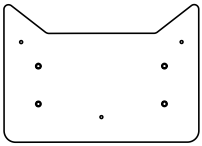 Dx5	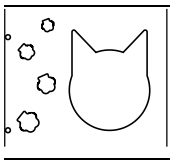 Ex1	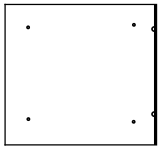 Effet1
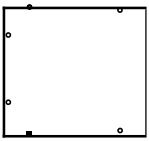 Gx1	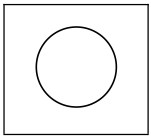 Hx1	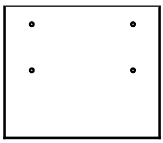 Ix2
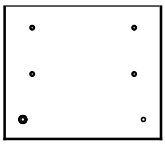 Jx1	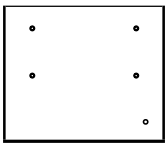 Kx1	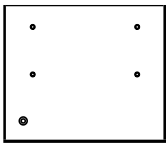 MX1
*chaque ensemble de produits est équipé de tournevis et clés		

COMPONENTS

Nx2	Ox12	Px1
(M4*70) N1x19 (M6*40) N2x71	(M8*35) N3x4 N4x4	Vx1
T1x19 T2x19	(Loop-pile mat) Qx1	(Loop-pile mat) R1x2
(Loop-pile mat) R2x3	(Plain velours) Sx1	Tx7 Ux4

* each set of products is equipped with screwdrivers and wrenches

Assemblée Instructions

CONSEILS :

1 . Le nombre de vis marqué au-dessus de est le réel numéro utilisé pendant installation. quand le produit est expédié, 1 ~3 plus de vis de chaque tapez va être donné comme pièces de rechange.

2. Pendant le utiliser de la produit, enfants sont interdit depuis approchant sans le entreprise de adultes .

3. Le bord de la produit est un un peu pointu, et toi besoin porter des gants pour installation; en même temps, Il est livré avec papier de verre, Alors toi peut polonais le bord

encore par toi-même; sans gants, sois prudent quand émouvant le roue de course . 4 . NE serrez pas les vis d'installation immediatement . Serrez le installation

visser deux fois après toutes les vis sont alignés

5. Il est recommandé de deux ou plus de personnes installent l'appareil

6 . s'il te plaît utilisez le suivant outils pour installer

Mètre à ruban

ciseaux

Feutre

Tournevis

Perceuse électrique

veuillez marquer la position sur le mur contre la plaque, réserver une distance d'environ 30 cm entre le plates-formes de saut, perceuse lhte trou et enterrer le tube ionique expansé (Foret A6mm le foret est utilisé pour les murs solides et un tube d'expansion jaune est intégré ; une perceuse gmm le foret est utilisé pour les parois creuses et un tube d'expansion papillon est intégré)

Solénoïde d'expansion

Papillon solénoïde

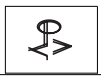

M4*70

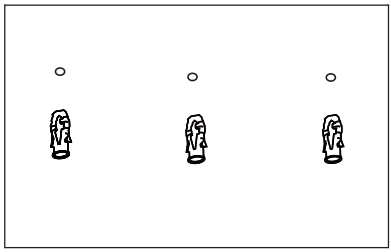

Assembly Instructions

STEP 1

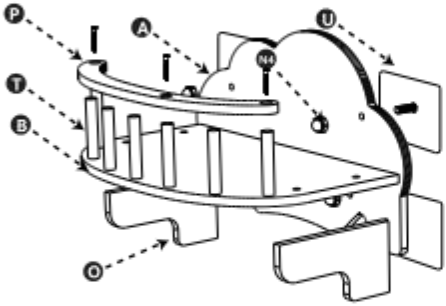

STEP 2

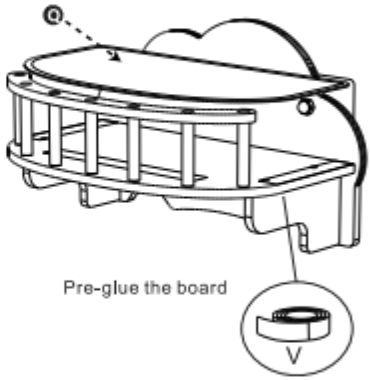

Install the fence table as shown
(note that this part is mounted on the glass wall)

STEP 3

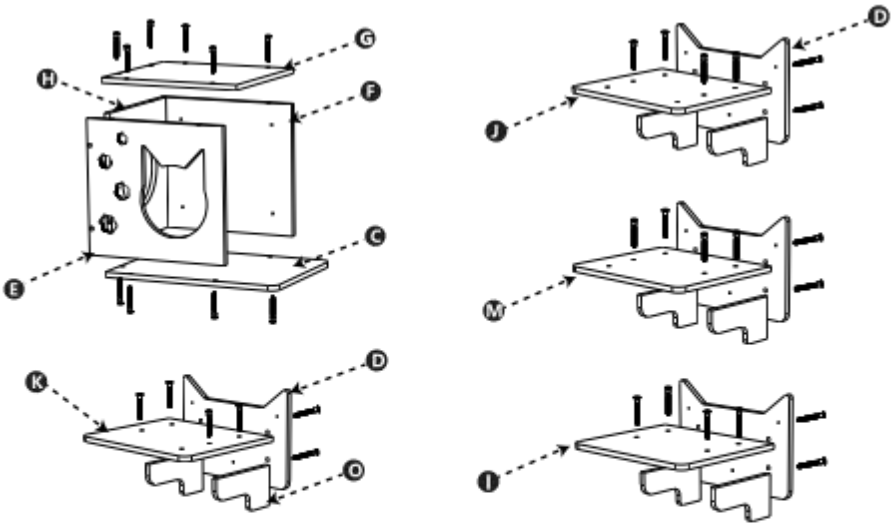

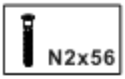

The picture shows a jumping platform and a cat's nest

Assembly Instructions

STEP 4

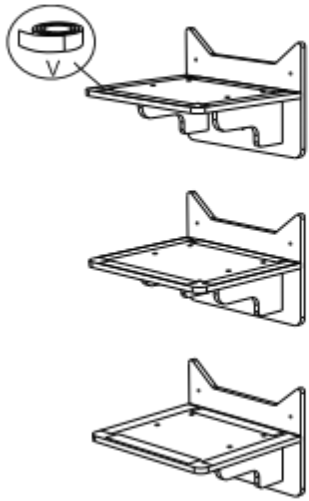

Put back glue on all four sides of the jumps

STEP 5

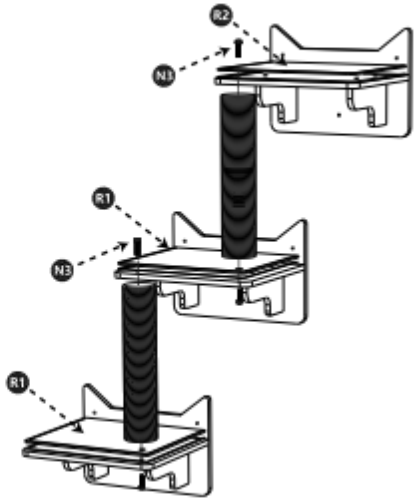

The jumping platform is fixed to the top ring and connected to the pole

STEP 6

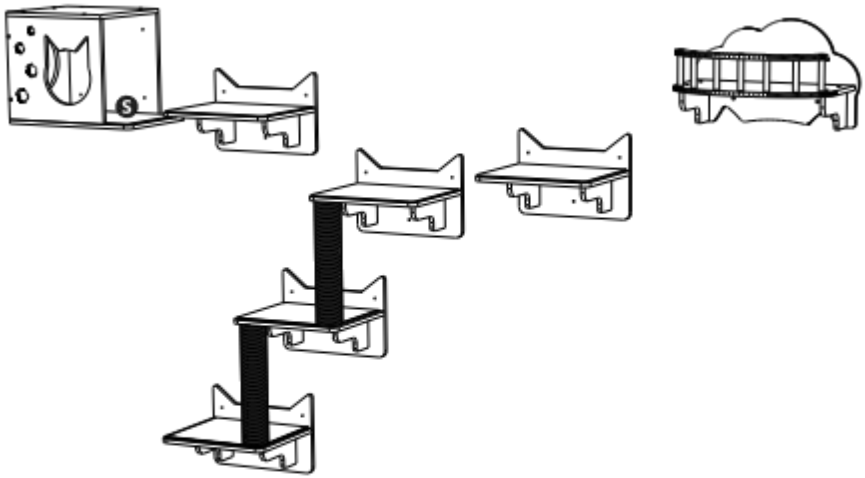

All parts are nailed to the wall
(The installation distance of each component should be within 30cm)

Address: Shuangchenglu 803nong11hao1602A-1609shi, baoshanqu, shanghai 200000 CN.

Imported to AUS: SIHAO PTY LTD, 1 ROKEVA STREETEASTWOOD NSW 2122 Australia

Imported to USA: Sanven Technology Ltd.Suite 250, 9166 Anaheim Place, Rancho Cucamonga, CA 91730

EC	REP

E-CrossStu GmbH.
Mainzer Landstr.69, 60329 Frankfurt am Main.

UK	REP

YH CONSULTING LIMITED.
C/O YH Consulting Limited Office 147, Centurion House, London Road, Staines-upon-Thames, Surrey, TW18 4AX.

VEVOR®

TOUGH TOOLS, HALF PRICE

Assistance technique et Certificat de garantie électronique Www.vevor.com/support

Technisch ondersteuning en E-garantiecertificaat Www. vurig. com/ondersteuning

Gemonteerde kattenplank Ins tallatie Instructies

wij blijven doorgaan toegewijd zijn aan voorzie jou gereedschap mee competitief prijs.

"redden Half", "Helft van de prijs" of andere soortgelijke uitdrukkingen gebruikt vertegenwoordigt bij ons slechts een

schatting van uw besparing van kunnen profiteren kopen bepaalde gereedschappen mee ons vergeleken met de majoor topmerken en doet niet noodzakelijkerwijs de bedoeling bedek alles categorieën van naar ols aangeboden door ons. Jij

Zijn vriendelijk eraan herinnerd om zorgvuldig te verifiëren wanneer Jij Zijn plaatsen een bestellen bij ons als jij Zijn daadwerkelijk besparen helft binnen vergelijking met de topmajor merken.

VEVOR®

TOUGH TOOLS, HALF PRICE

Mounted Cat Shelf

Model: SSGQK-02

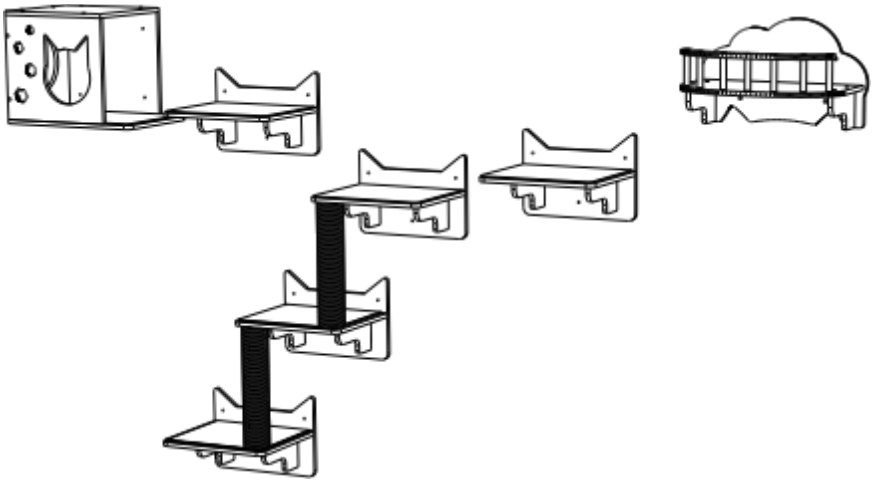

NEED HELP? CONTACT US!

Have product questions? Need technical support? Please feel free to contact us:

Technical Support and E-Warranty Certificate
www.vevor.com/support

This is the original instruction, please read all manual instructions carefully before operating VEVOR reserves a clear interpretation of our user manual. The appearance of the product shall be subject to the product you received. Please forgive us that we won't inform you again if there are any technology or software updates on our product.

SPECIFICATIES

Model	SSGQK-02
Kleur	Natuur

COMPONENTEN

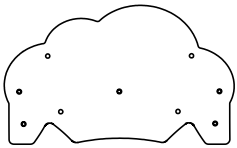 Bijl 1	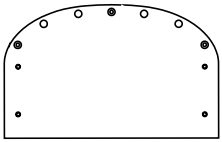 Bx 1	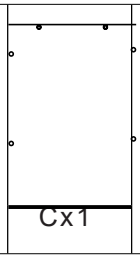 Cx1
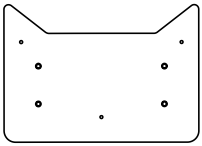 Dx 5	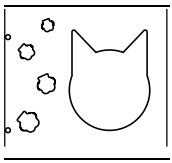 Vb1	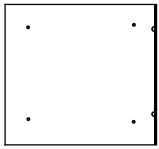 Fx1
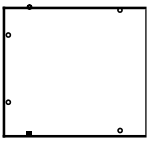 Gx 1	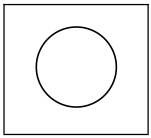 Hx 1	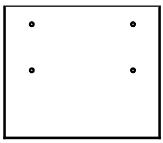 Ix 2
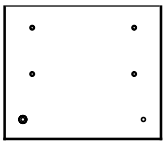 Jx 1	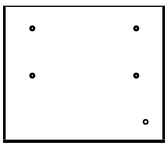 Kx 1	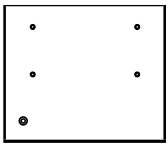 Mx 1
*elk set producten is uitgerust met schroevendraaiers en sleutels		

COMPONENTS

Nx2	Ox12	Px1
(M4*70) N1x19 (M6*40) N2x71	(M8*35) N3x4 N4x4	Vx1
T1x19 T2x19	(Loop-pile mat) Qx1	(Loop-pile mat) R1x2
(Loop-pile mat) R2x3	(Plain velours) Sx1	Tx7 Ux4

* each set of products is equipped with screwdrivers and wrenches

Montage Instructies

TIPS :

1. De aantal schroeven mark d boven is de feitelijk nummer gebruikt tijdens installatie. wanneer de Product wordt verzonden , 1 ~3 meer schroeven van elke typ wil zijn gegeven als reserveonderdelen.

2. Tijdens de gebruik van de Product, kinderen Zijn verboden van nadert zonder de bedrijf van volwassenen .

3. De rand van de Product is A beetje scherp , jij ook behoefte handschoenen te dragen voor installatie; tegelijkertijd , het komt met schuurpapier, Dus jij kan Pools de rand opnieuw alleen; zonder handschoenen , wees voorzichtig wanneer ontroerend de loopwiel . 4 . Draai de installatieschroeven niet vast onmiddelijk . Draai de installatie twee keer daarna schroeven alle schroeven zijn uitgelijnd

5. Het is aanbevolen dat twee of meer mensen installeren het apparaat

6 . Alsjeblieft gebruik het volgende tools om te installeren

Rolmaat

schaar

Markeerstift

schroevendraaier

Elektrische boormachine

markeer de positie op de muur tegen de plaat, reserveer een afstand van ongeveer 30 cm tussen de springplatforms, boor lhte gat en begraaf de expansie -ionenbuis
(A6 mm boor bit wordt gebruikt voor massieve muren en er is een gele expansiebuis ingebed ; een gmm-boor bit wordt gebruikt voor holle wanden en een vlinderexpansiebuis is ingebed)

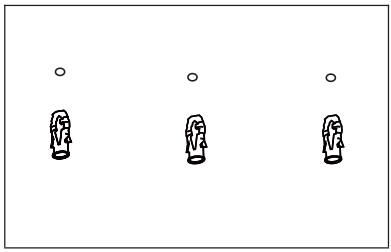

Uitbreidingssolenoïde

Vlinder solenoïde

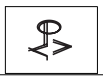

M4*70

Assembly Instructions

STEP 1

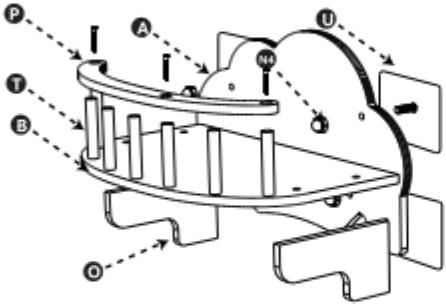

STEP 2

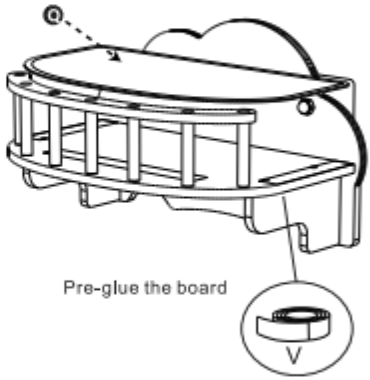

Install the fence table as shown
(note that this part is mounted on the glass wall)

STEP 3

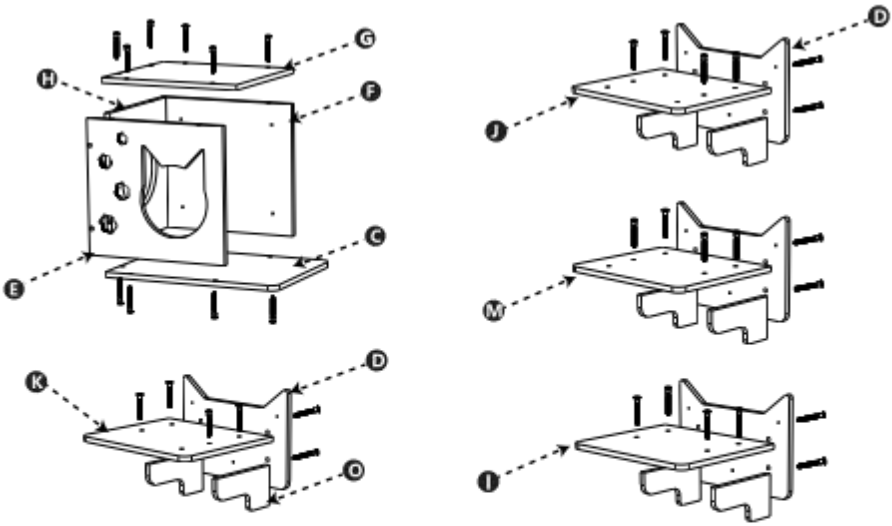

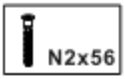

The picture shows a jumping platform and a cat's nest

Assembly Instructions

STEP 4

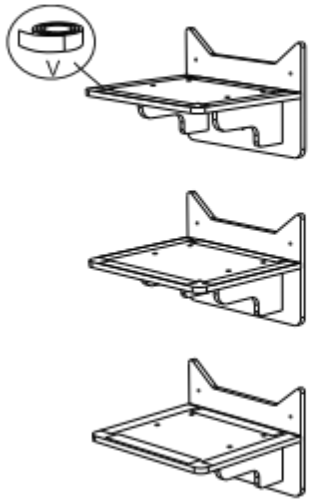

Put back glue on all four sides of the jumps

STEP 5

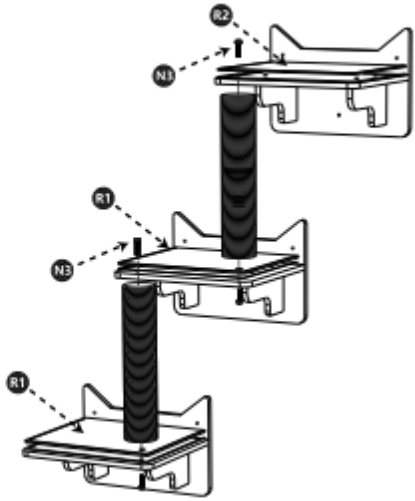

The jumping platform is fixed to the top ring and connected to the pole

STEP 6

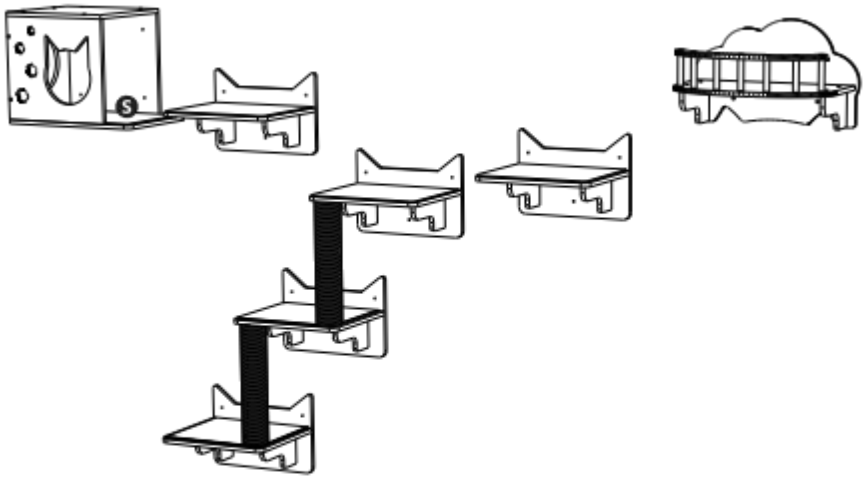

All parts are nailed to the wall
(The installation distance of each component should be within 30cm)

Address: Shuangchenglu 803nong11hao1602A-1609shi, baoshanqu, shanghai 200000 CN.

Imported to AUS: SIHAO PTY LTD, 1 ROKEVA STREETEASTWOOD NSW 2122 Australia

Imported to USA: Sanven Technology Ltd.Suite 250, 9166 Anaheim Place, Rancho Cucamonga, CA 91730

EC	REP

E-CrossStu GmbH.
Mainzer Landstr.69, 60329 Frankfurt am Main.

UK	REP

YH CONSULTING LIMITED.
C/O YH Consulting Limited Office 147, Centurion House, London Road, Staines-upon-Thames, Surrey, TW18 4AX.

VEVOR®

TOUGH TOOLS, HALF PRICE

Technische ondersteuning en E-war ranty-certificaat Www.vevor. com/ondersteuning

VEVOR®

TOUGH TOOLS, HALF PRICE

Teknisk stöd och E-garantibevis Www. vevor. se/support

Monterad katthylla Installation Instruktioner

vi fortsätter att vara engagerad i ge dig verktyg med konkurrenskraftig e pris.

"spara Halv", "Halva priset" eller andra liknande uttryck Begagnade av oss representerar endast en

uppskattning av dina besparingar kan ha nytta av uppköp vissa verktyg med oss jämfört med majoren toppmärken och gör inte nödvändigtvis menat täcka alla kategorier av till ols erbjuds av oss. Du

är vänligen påmind om att noggrant kontrollera när du är placering en beställa med oss om du är faktiskt sparar hälften in jämför med högsta majoren märken.

VEVOR®

TOUGH TOOLS, HALF PRICE

Mounted Cat Shelf

Modell: SSGQK-02

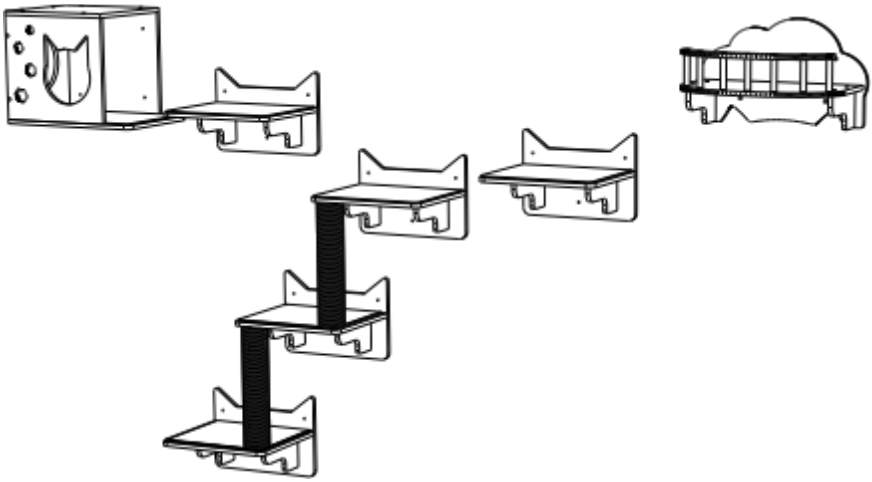

NEED HELP? CONTACT US!

Have product questions? Need technical support? Please feel free to contact us:

Technical Support and E-Warranty Certificate
www.vevor.com/support

This is the original instruction, please read all manual instructions carefully before operating VEVOR reserves a clear interpretation of our user manual. The appearance of the product shall be subject to the product you received. Please forgive us that we won't inform you again if there are any technology or software updates on our product.

SPECIFIKATIONER

Modell	SSGQK-02
Färg	Natur

KOMPONENTER

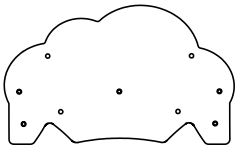 Yxa 1	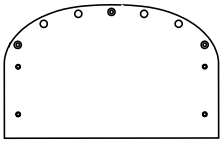 Bx 1	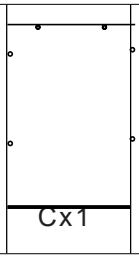 Cx1
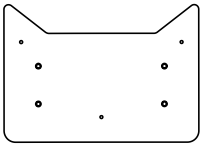 Dx 5	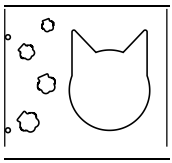 Ex1	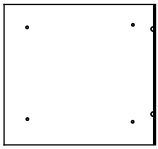 Fx1
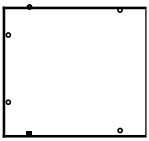 Gx 1	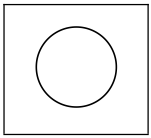 Hx 1	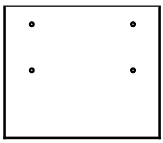 Ix 2
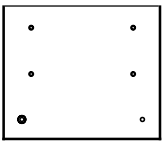 Jx 1	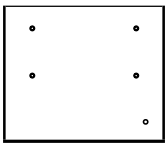 Kx 1	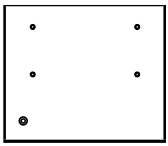 Mx 1

*varje uppsättning produkt s är utrustad med skruvmejslar och skiftnycklar

COMPONENTS

Nx2	Ox12	Px1
(M4*70) N1x19 (M6*40) N2x71	(M8*35) N3x4 N4x4	Vx1
T1x19 T2x19	(Loop-pile mat) Qx1	(Loop-pile mat) R1x2
(Loop-pile mat) R2x3	(Plain velours) Sx1	Tx7 Ux4

* each set of products is equipped with screwdrivers and wrenches

hopsättning Instruktioner

TIPS :

1 . De antal skruvar marke d ovan är faktisk nummer som används under installation. när de produkt skickas , 1 ~3 fler skruvar av varje typ kommer vara given som reservdelar.

2 . Under de använda sig av av produkt, barn är förbjuden från närmar sig utan de företag av vuxna .

3 . Kanten av produkt är a lite skarp , och du behöver att bära handskar för installation; på samma gång , det följer med sandpapper, Så du burk putsa kanten igen på egen hand; utan handskar , var försiktig när rörande de löphjul . 4 .
Dra inte åt installationsskruvarna genast . Dra åt installation
skruvar två gånger efter alla skruvar är inriktade

5. Det rekommenderas att två eller fler människor installerar enheten

6 . snälla du Använd följande verktyg för att installera

Måttband

sax

Markörskruvmejsel

Elektrisk borrmaskin

markera positionen på väggen mot plattan, reservera ca 30 cm avstånd mellan de hoppa plattformar, borra lhte hål och gräv ner det expansiva jonröret
(A6 mm borr bit används för solida väggar och ett gult expansionsrör är inbäddat ; en gmm borr bit används för hålväggar och fjärilsexpansionsrör är inbäddad)

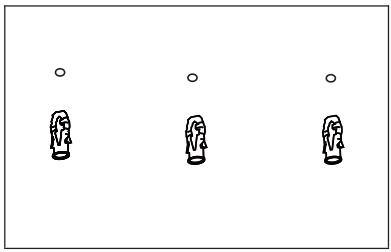

Expansion ssolenoid

Fjäril solenoid

M4*70

Assembly Instructions

STEP 1

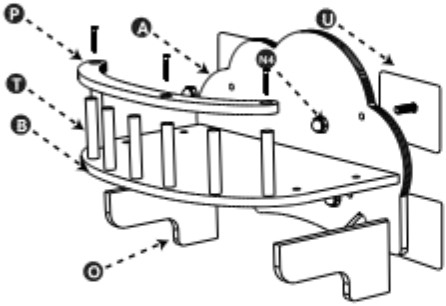

STEP 2

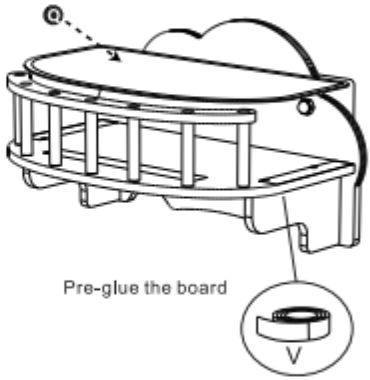

Install the fence table as shown
(note that this part is mounted on the glass wall)

STEP 3

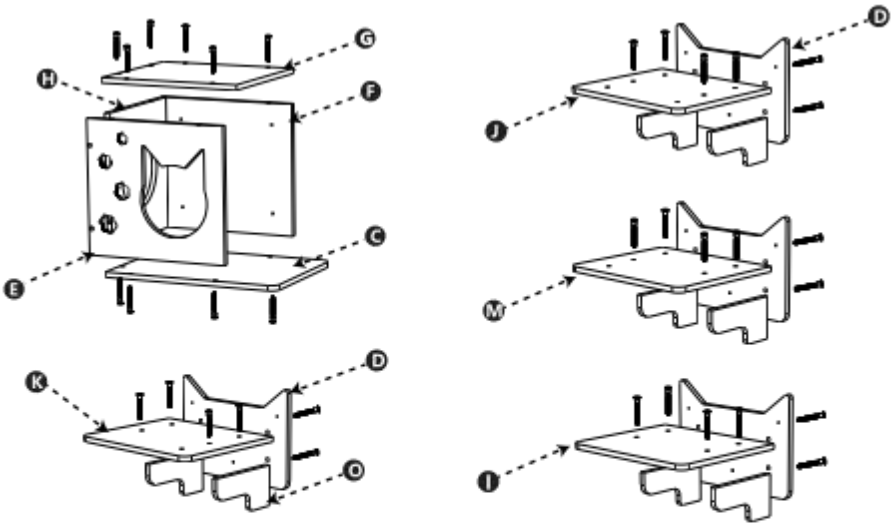

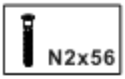

The picture shows a jumping platform and a cat's nest

Assembly Instructions

STEP 4

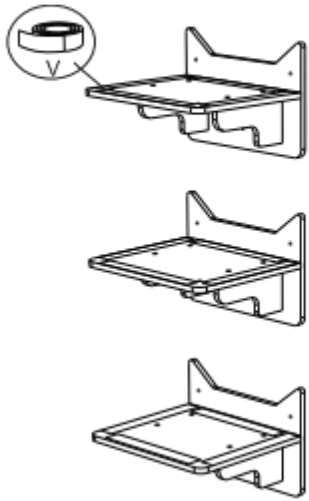

Put back glue on all four sides of the jumps

STEP 5

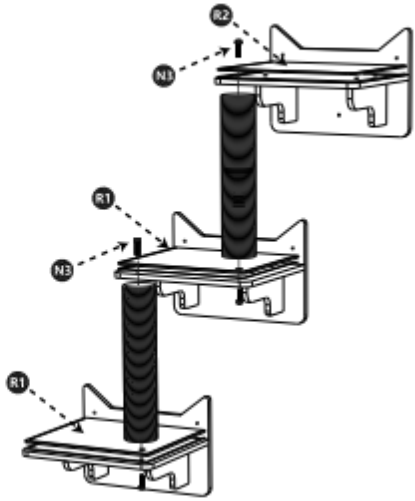

The jumping platform is fixed to the top ring and connected to the pole

STEP 6

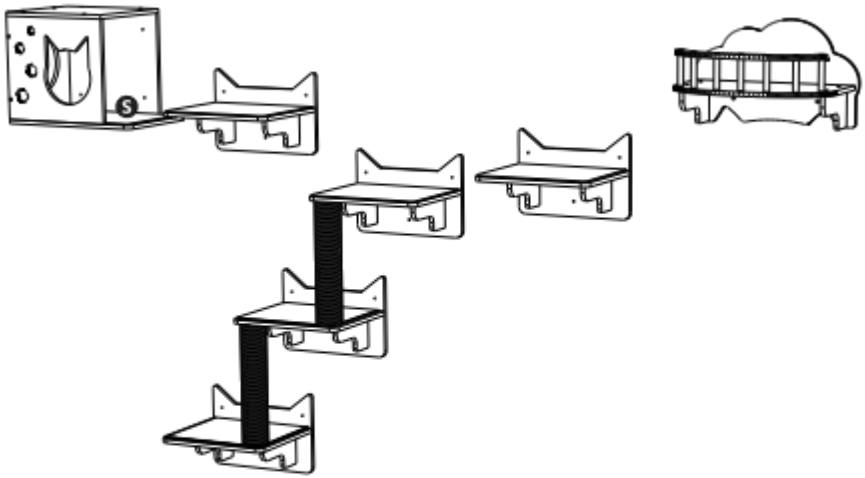

All parts are nailed to the wall
(The installation distance of each component should be within 30cm)

Address: Shuangchenglu 803nong11hao1602A-1609shi, baoshanqu, shanghai 200000 CN.

Imported to AUS: SIHAO PTY LTD, 1 ROKEVA STREETEASTWOOD NSW 2122 Australia

Imported to USA: Sanven Technology Ltd.Suite 250, 9166 Anaheim Place, Rancho Cucamonga, CA 91730

EC	REP

E-CrossStu GmbH.
Mainzer Landstr.69, 60329 Frankfurt am Main.

UK	REP

YH CONSULTING LIMITED.
C/O YH Consulting Limited Office 147, Centurion House, London Road, Staines-upon-Thames, Surrey, TW18 4AX.

VEVOR®

TOUGH TOOLS, HALF PRICE

Teknisk support och E- garanti certifikat

www.vevor.se/support

VEVOR®

TOUGH TOOLS, HALF PRICE

Técnico apoyo y Certificado de garantía electrónica Www. vevor. es/soporte

Estante para gatos montado Ins talación Instrucciones

continuamos estar comprometido con proporcionarle herramientas con competitivo precio.

"ahorrar Medio", "Mitad de precio" o cualquier otra expresión similar usado por nosotros sólo representa una

estimación de ahorros podría beneficiarse de comprar ciertas herramientas con nosotros en comparación con los principales primeras marcas y hace no necesariamente significa cubrir todo categorias de herramientas Ofrecido por nosotros. Tú

son Le recordamos amablemente verificar cuidadosamente cuando tú son colocación un ordenar con a nosotros si usted son realmente ahorrando la mitad en comparar con el mejor importante marcas.

VEVOR®

TOUGH TOOLS, HALF PRICE

Mounted Cat Shelf

Modelo: SSGQK-02

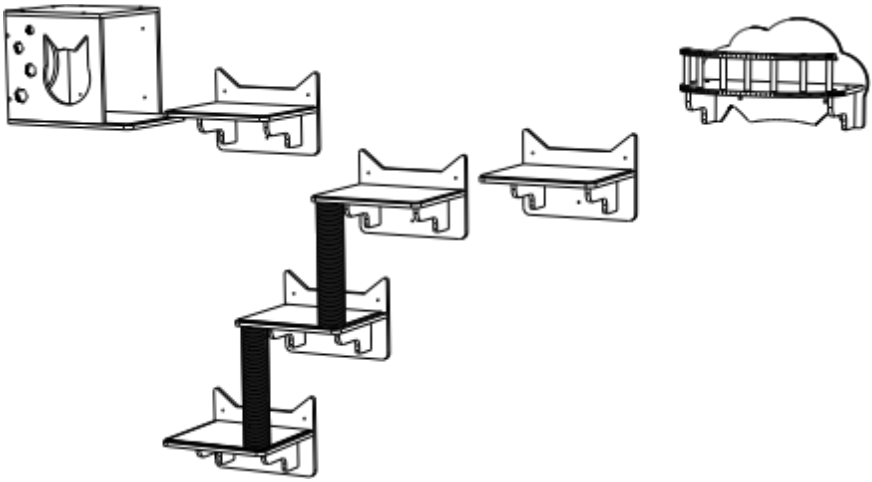

NEED HELP? CONTACT US!

Have product questions? Need technical support? Please feel free to contact us:

Technical Support and E-Warranty Certificate
www.vevor.com/support

This is the original instruction, please read all manual instructions carefully before operating VEVOR reserves a clear interpretation of our user manual. The appearance of the product shall be subject to the product you received. Please forgive us that we won't inform you again if there are any technology or software updates on our product.

ESPECIFICACIONES

Modelo	SSGQK-02
Color	Naturaleza

COMPONENTES

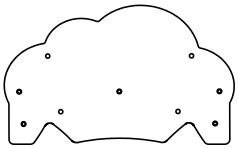 Hacha 1	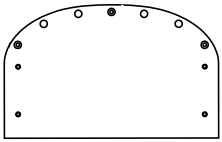 caja 1	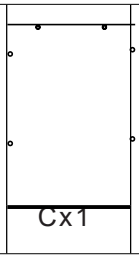 Cx1
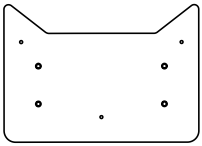 dx 5	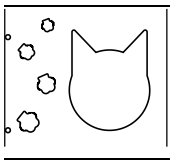 Ej1	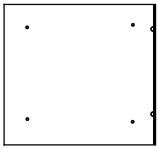 Fx1
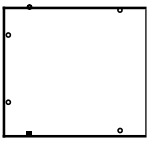 Gx 1	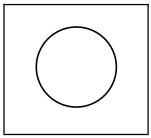 Hx 1	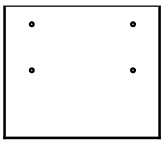 Ix 2
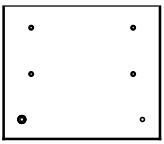 Jx 1	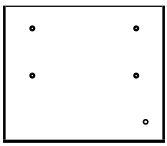 Kx 1	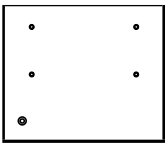 mx 1
*cada conjunto de productos está equipado con destornilladores y llaves		

COMPONENTS

Nx2	Ox12	Px1
(M4*70) N1x19 (M6*40) N2x71	(M8*35) N3x4 N4x4	Vx1
T1x19 T2x19	(Loop-pile mat) Qx1	(Loop-pile mat) R1x2
(Loop-pile mat) R2x3	(Plain velours) Sx1	Tx7 Ux4

* each set of products is equipped with screwdrivers and wrenches

Asamblea Instrucciones

CONSEJOS :

1 . El número de tornillos marca d arriba es el actual numero usado durante instalación. cuando el producto se envía , 1 ~3 más tornillos de cada escriba voluntad ser dado como repuestos.

2 . Durante el usar del producto, niños son prohibido de que se acerca sin el compañía de adultos .

3 . El borde del producto es a poco afilado , y tú necesidad usar guantes para instalación; al mismo tiempo , viene con papel de lija, Vos tambien poder polaco el borde

de nuevo por tí mismo; sin guantes , ten cuidado cuando conmovedor el rueda corriente . 4 . No apriete los tornillos de instalación. En seguida . Apriete el instalación

tornillos dos veces después todos los tornillos estan alineados

5. Se recomienda que dos o más personas instalan el dispositivo

6 . por favor usa lo siguiente herramientas para instalar

Cinta métrica

Tijeras

Rotulador

Destornillador

Taladro eléctrico

marque la posición en la pared contra la placa, reserve una distancia de aproximadamente 30 cm entre el plataformas de salto, taladro lhte agujero y enterrar el tubo de iones de expansión

(Taladro A6mm la broca se utiliza para paredes sólidas y se incrusta un tubo de expansión amarillo ; un taladro mmm La broca se utiliza para paredes huecas y un tubo de expansión de mariposa. es incorporado)

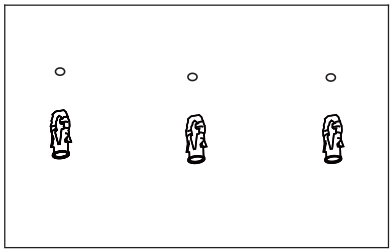

Solenoide de expansión

Mariposa solenoide

M4*70

Assembly Instructions

STEP 1

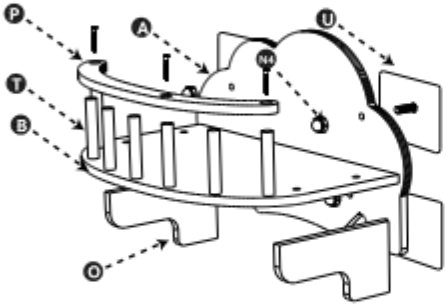

STEP 2

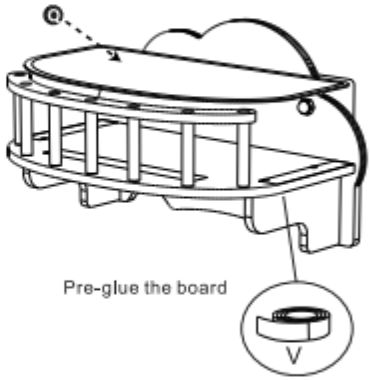

Install the fence table as shown
(note that this part is mounted on the glass wall)

STEP 3

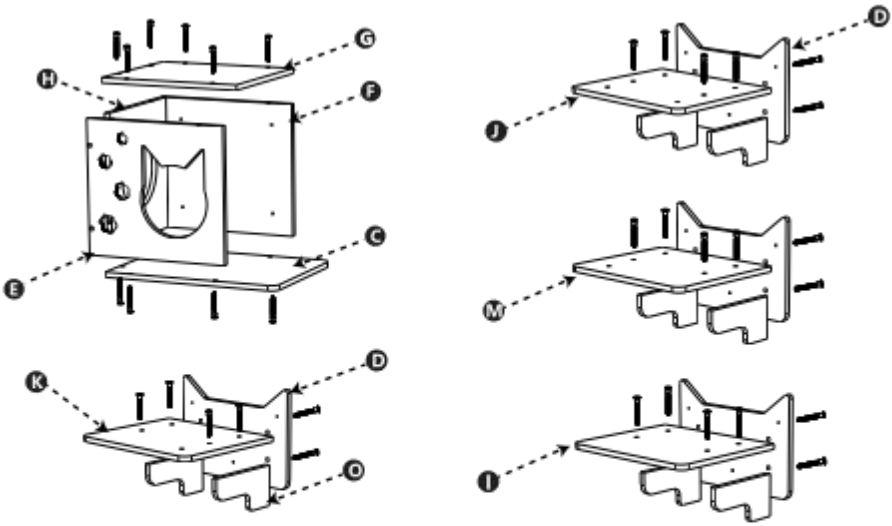

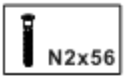

The picture shows a jumping platform and a cat's nest

Assembly Instructions

STEP 4

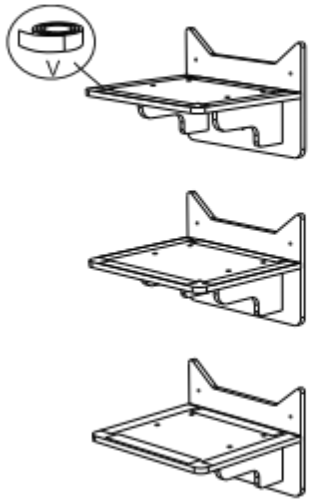

Put back glue on all four sides of the jumps

STEP 5

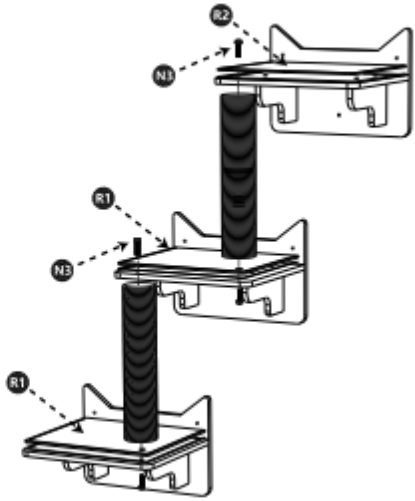

The jumping platform is fixed to the top ring and connected to the pole

STEP 6

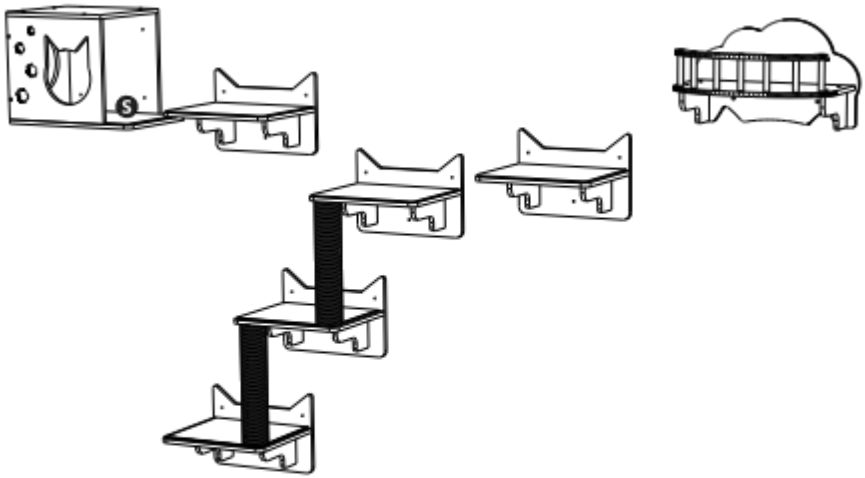

All parts are nailed to the wall
(The installation distance of each component should be within 30cm)

Address: Shuangchenglu 803nong11hao1602A-1609shi, baoshanqu, shanghai 200000 CN.

Imported to AUS: SIHAO PTY LTD, 1 ROKEVA STREETEASTWOOD NSW 2122 Australia

Imported to USA: Sanven Technology Ltd.Suite 250, 9166 Anaheim Place, Rancho Cucamonga, CA 91730

EC	REP

E-CrossStu GmbH.
Mainzer Landstr.69, 60329 Frankfurt am Main.

UK	REP

YH CONSULTING LIMITED.
C/O YH Consulting Limited Office 147, Centurion House, London Road, Staines-upon-Thames, Surrey, TW18 4AX.

VEVOR®

TOUGH TOOLS, HALF PRICE

Soporte técnico y Certificado de garantía de guerra electrónica Www.vevor. es/soporte