VEVOR®

TOUGH TOOLS, HALF PRICE

Technical Support and E-Warranty Certificate www.vevor.com/support

SANDBOX

MODEL:WSB-1200E

We continue to be committed to provide you tools with competitive price.
"Save Half", "Half Price" or any other similar expressions used by us only represents an estimate of savings you might benefit from buying certain tools with us compared to the major top brands and does not necessarily mean to cover all categories of tools offered by us. You are kindly reminded to verify carefully when you are placing an order with us if you are actually saving half in comparison with the top major brands.

VEVOR®
TOUGH TOOLS, HALF PRICE

SANDBOX

MODEL: WSB-1200E

NEED HELP? CONTACT US!

Have product questions? Need technical support? Please feel free to contact us:

Technical Support and E-Warranty Certificate
www.vevor.com/support

This is the original instruction, please read all manual instructions carefully before operating. VEVOR reserves a clear interpretation of our user manual. The appearance of the product shall be subject to the product you received. Please forgive us that we won't inform you again if there are any technology or software updates on our product.

SAFETY INSTRUCTIONS

⚠ **WARNING:**

1. Please read all instructions carefully and keep it for future reference.
2. Assembled only by adults. Children should use this product under the parental supervision.
3. Keep all small parts and packaging materials for this product away from babies and children, otherwise they may pose a choking hazard.
4. Lack of attachment may cause a risk of tipping.
5. Do not overload.

Warning for Assembly:

1. Remove all packaging, separate and count all parts and hardware.
2. Read through each step carefully and follow the proper order.
3. We recommend that, where possible, all items are assembled near the area in which they will be placed in use, to avoid moving the product unnecessarily once assembled.
4. Ensure a secure surface during installation, and place the product always on a flat, steady and stable surface.

MODEL AND PARAMETERS

Model	WSB-1200E
Age of application	3-12 years
Max. bearing capacity	175lbs(80kg)/Each seat
Appearance	Square
Product Size	133*120*43cm
Color	Orange-red
Materials	Wood

PARTS LIST AND INSTALLATION

NOTE: Please check you have all the parts as shown in the part list.

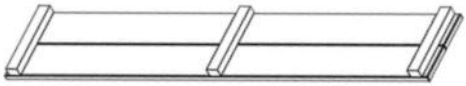 ① X2	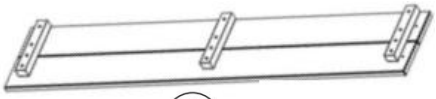 ② X2
③ X2	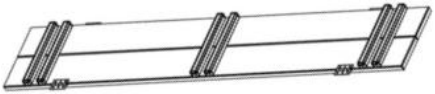 ④ X2
⑤ X4	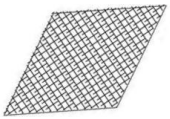 ⑥ X1
⑦ X6	⑧ X6
⑨ X2	User Manual x1
	A(M3.5x40):12+1pcs B(M3.0x35):36+1pcs C(M3.0x25):8+1pcs D(M3.0x14):24+1pcs

Installation:

STEP 1: Splice the coaming plate 5 with screws and connecting blocks. (**NOTE:** Preferably using a power tool.)

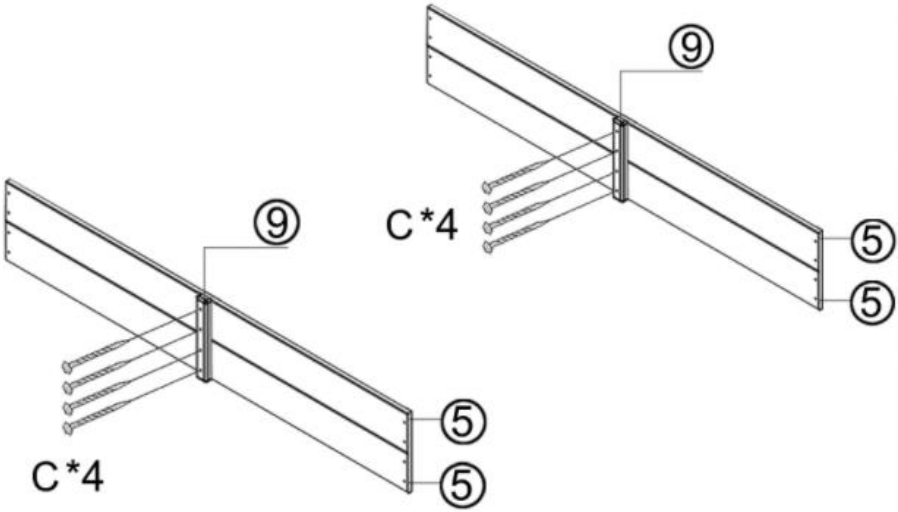

STEP 2: Splice all coaming panels with screws.

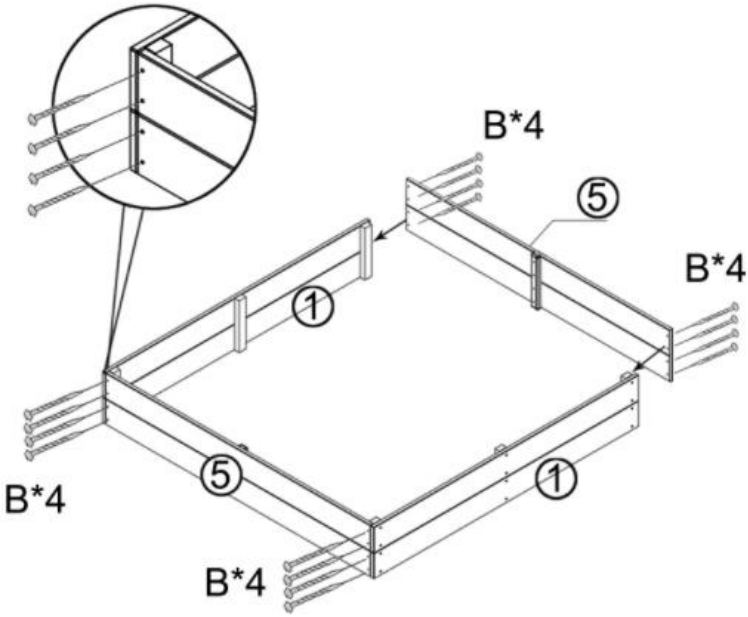

STEP 3: Mounting the seat bottom plates.

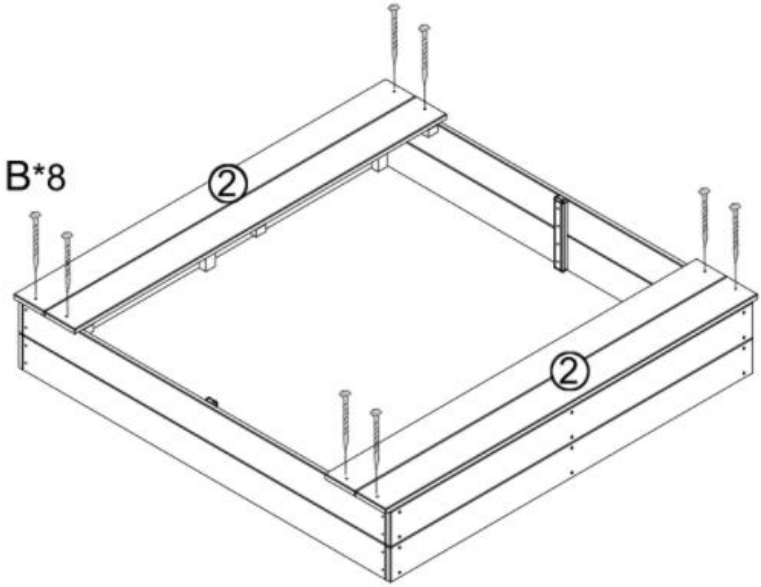

STEP 4: Mounting the seats.

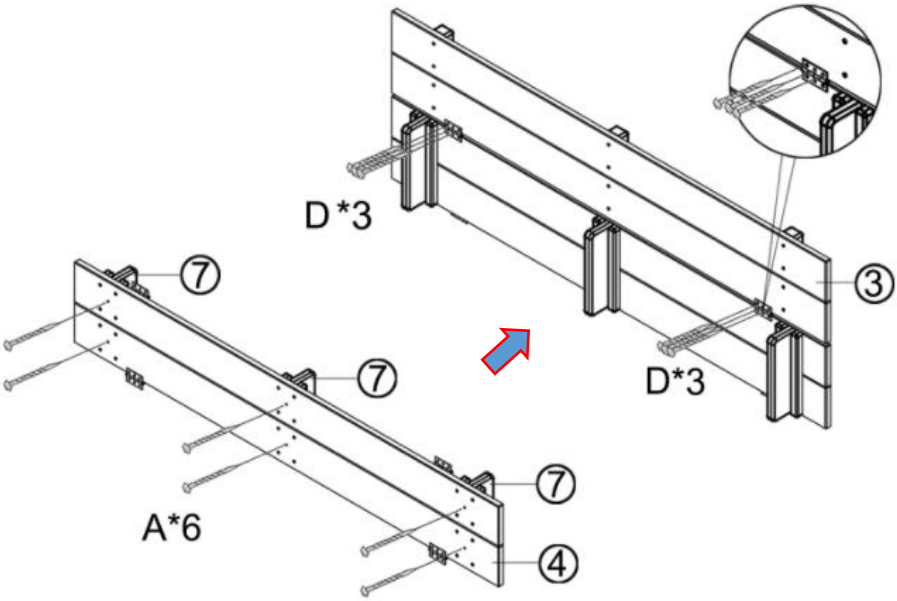

NOTE: This step need repeat twice.

STEP 5: Secure the hinges.

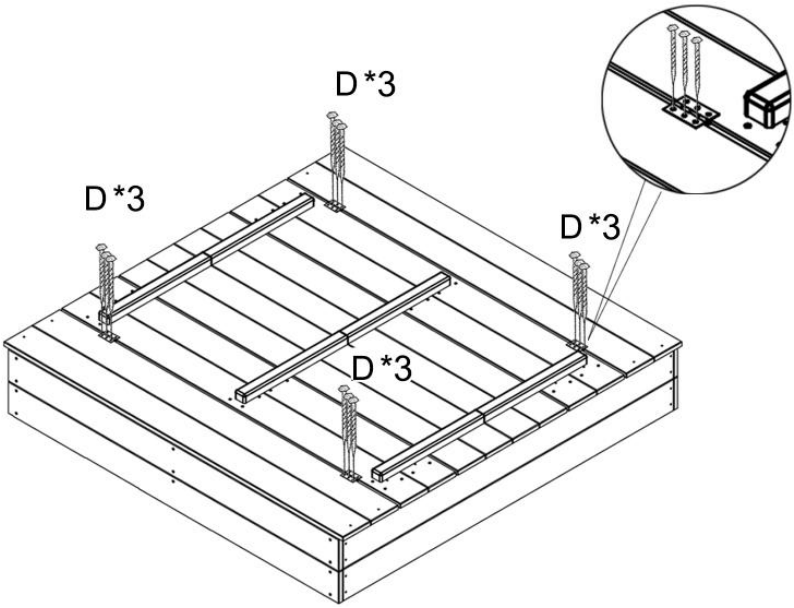

NOTE: The seat folds and turns into a lid when not in use.

STEP 6: Install the backrest support block and move the whole product onto the bottom cloth.

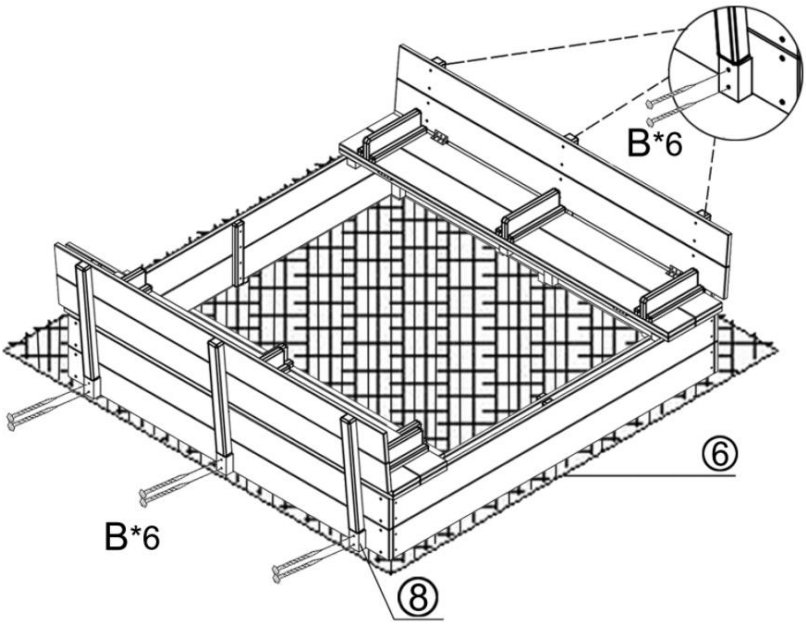

MAINTENANCE

1. Store away from direct sunlight.
2. Check the reliability of the parts before use.

Manufacturer: JIANYANG LONGSHENG ARTS CO.,LTD
Address: BAIDIYUAN,JIANGKOU TOWN,JIANYANG,FUJIAN,CHINA
Imported to AUS: SIHAO PTY LTD. 1 ROKEVA STREETEASTWOOD NSW 2122 Australia
Imported to USA: Sanven Technology Ltd. Suite 250, 9166 Anaheim Place, Rancho Cucamonga, CA 91730

UK	REP

E-CrossStu GmbH
Mainzer Landstr.69, 60329 Frankfurt am Main.

EC	REP

YH CONSULTING LIMITED.
C/O YH Consulting Limited Office 147, Centurion House,
London Road, Staines-upon-Thames, Surrey, TW18 4AX

VEVOR®

TOUGH TOOLS, HALF PRICE

Technical Support and E-Warranty Certificate

www.vevor.com/support

VEVOR®

TOUGH TOOLS, HALF PRICE

Supporto tecnico e certificato di garanzia elettronica www.vevor.com/support

SABBIA

MODELLO:WSB-1200E

We continue to be committed to provide you tools with competitive price.
"Save Half", "Half Price" or any other similar expressions used by us only represents an estimate of savings you might benefit from buying certain tools with us compared to the major top brands and does not necessarily mean to cover all categories of tools offered by us. You are kindly reminded to verify carefully when you are placing an order with us if you are actually saving half in comparison with the top major brands.

VEVOR®
TOUGH TOOLS, HALF PRICE

SANDBOX

MODELLO: WSB-1200E

NEED HELP? CONTACT US!

Have product questions? Need technical support? Please feel free to contact us:

Technical Support and E-Warranty Certificate
www.vevor.com/support

This is the original instruction, please read all manual instructions carefully before operating. VEVOR reserves a clear interpretation of our user manual. The appearance of the product shall be subject to the product you received. Please forgive us that we won't inform you again if there are any technology or software updates on our product.

SAFETY INSTRUCTIONS

⚠AVVERTIMENTO:

6. Si prega di leggere attentamente tutte le istruzioni e di conservarle per riferimento futuro.
7. Assemblato solo da adulti . I bambini dovrebbero utilizzare questo prodotto sotto la supervisione dei genitori.
8. Tenere tutte le piccole parti e i materiali di imballaggio di questo prodotto lontano dalla portata di neonati e bambini, altrimenti potrebbero rappresentare un rischio di soffocamento.
9. La mancanza di fissaggio può causare il rischio di ribaltamento.
10. Non sovraccaricare .

Avvertenza per il montaggio:

5. Rimuovere tutto l'imballaggio, separare e contare tutte le parti e l'hardware.
6. Leggi attentamente ogni passaggio e segui l'ordine corretto.
7. Si consiglia, ove possibile, di montare tutti gli articoli in prossimità dell'area in cui verranno utilizzati, per evitare di spostare inutilmente il prodotto una volta montato.
8. Garantire una superficie sicura durante l'installazione e posizionare il prodotto sempre su una superficie piana, stabile e stabile.

MODEL AND PARAMETERS

Modello	WSB-1200E
Età di applicazione	3-12 anni
Massimo . capacità portante	175 libbre (80 kg) /Ogni sedile
Aspetto	Piazza
Taglia del prodotto	133*120*43 cm

Colore	Rosso-arancio
Materiali	Legna

PARTS LIST AND INSTALLATION

NOTA: verificare di avere tutte le parti come mostrato nell'elenco delle parti.

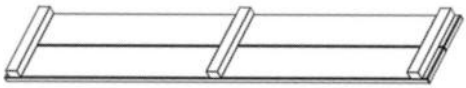 ① X2	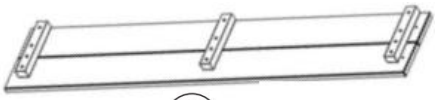 ② X2
③ X2	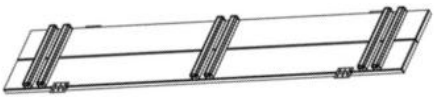 ④ X2
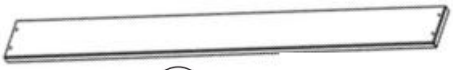 ⑤ X4	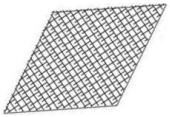 ⑥ X1
⑦ X6	⑧ X6
⑨ X2	Manuale utentex1

A(M3.5x40):12+1pcs
B(M3.0x35):36+1pcs
C(M3.0x25):8+1pcs
D(M3.0x14):24+1pcs

Installazione:

FASE 1: giuntare la piastra di mastra 5 con viti e blocchi di collegamento.
(**NOTA:** preferibilmente utilizzando uno strumento elettrico.)

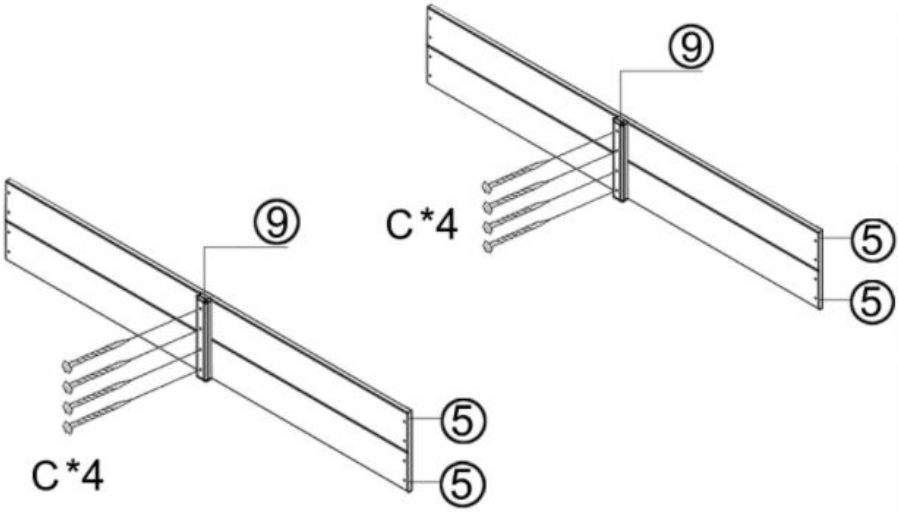

FASE 2: unire tutti i pannelli della mastra con le viti.

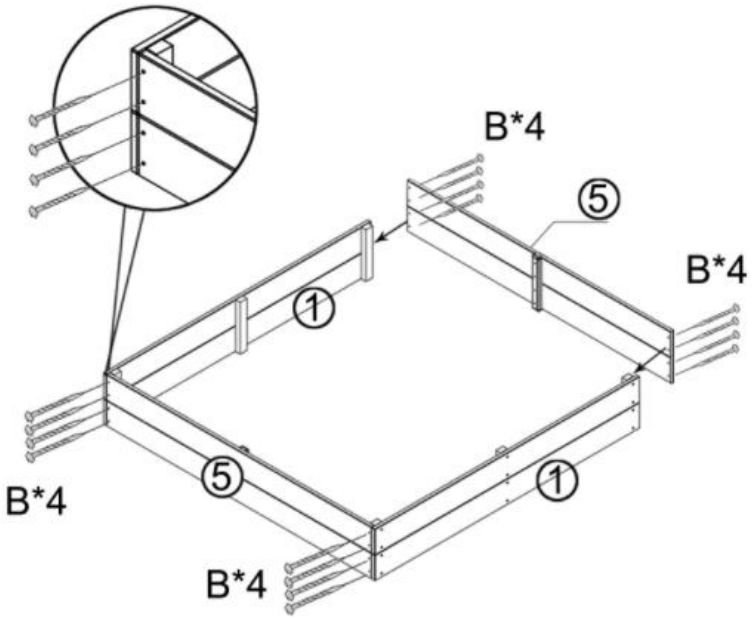

FASE 3: Montaggio delle piastre inferiori del sedile.

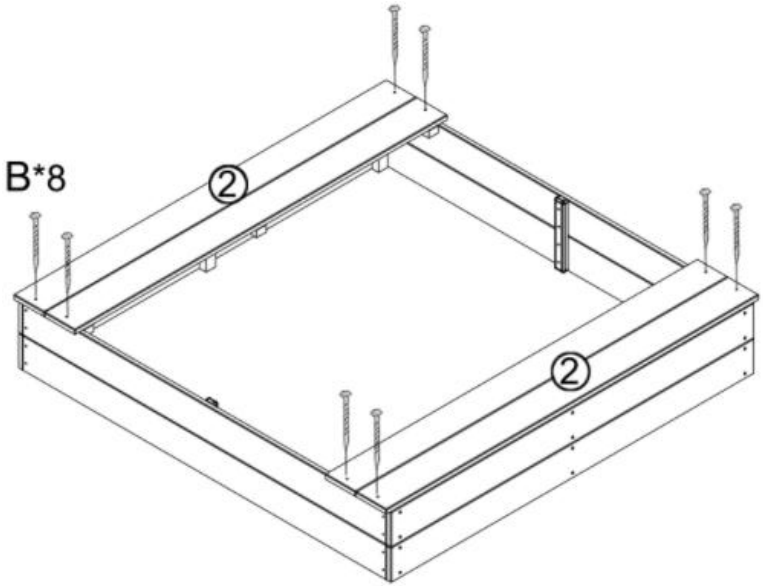

FASE 4: Montaggio dei sedili.

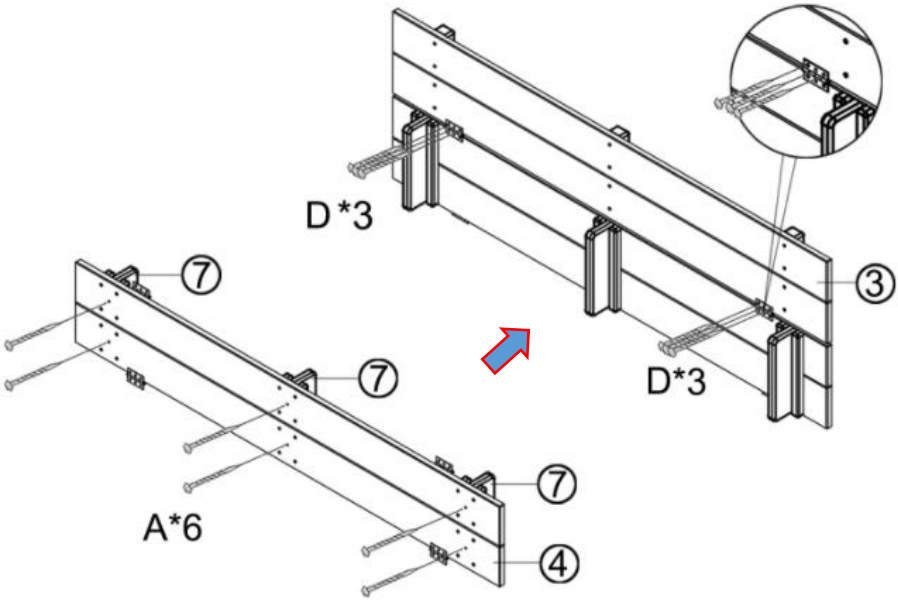

NOTA: questo passaggio deve essere ripetuto due volte.

PASSO 5: Fissare le cerniere.

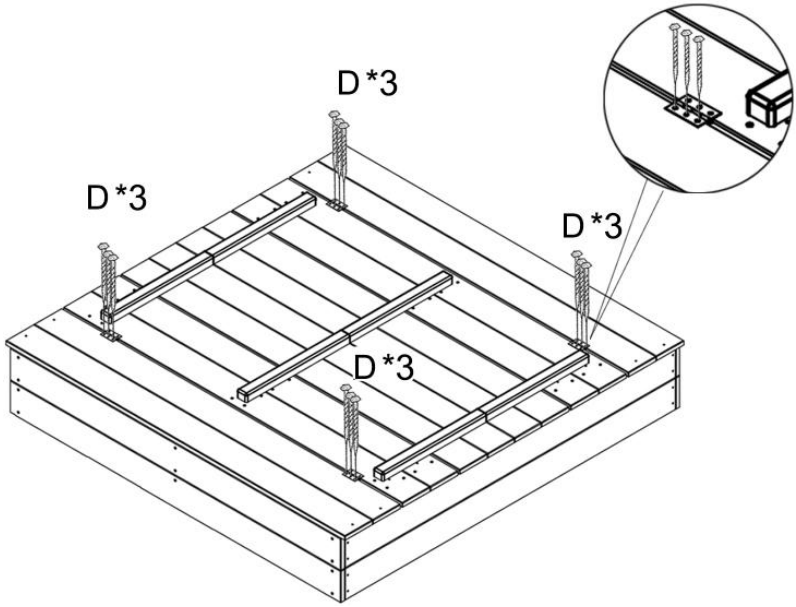

NOTA: il sedile si piega e si trasforma in un coperchio quando non viene

utilizzato.

FASE 6: Installare il blocco di supporto dello schienale e spostare l'intero prodotto sul tessuto inferiore.

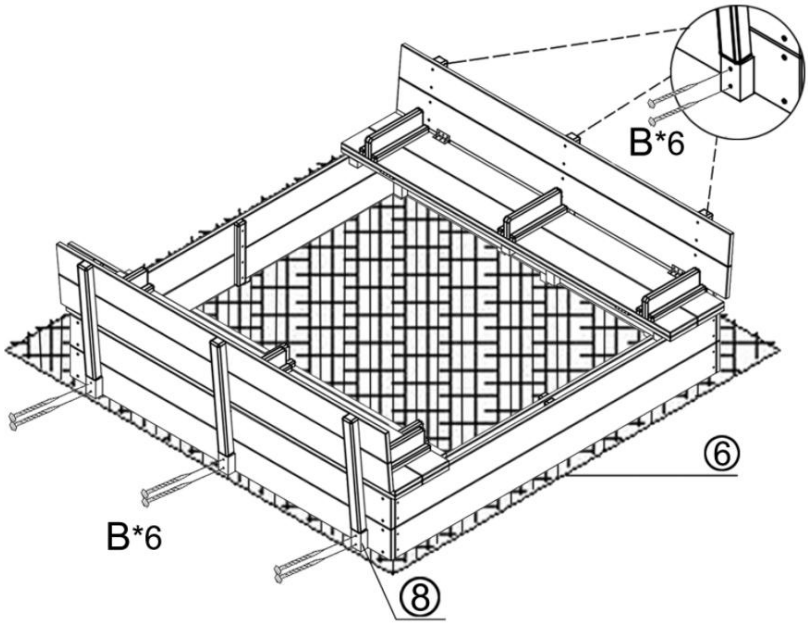

MAINTENANCE

3. Conservare lontano dalla luce solare diretta .
4. Verificare l'affidabilità delle parti prima dell'uso.

Produttore: JIANYANG LONGSHENG ARTS CO.,LTD
Indirizzo: BAIDIYUAN, CITTÀ DI JIANGKOU, JIANYANG, FUJIAN, CINA
Importato in AUS: SIHAO PTY LTD. 1 ROKEVA STREETEASTWOOD NSW 2122 Australia
Importato negli Stati Uniti: Sanven Technology Ltd. Suite 250, 9166 Anaheim Place, Rancho Cucamonga, CA 91730

UK	REP

E-CrossStu GmbH

Mainzer Landstr.69, 60329 Frankfurt am Main.

EC	REP

YH CONSULTING LIMITED.

C/O YH Consulting Limited Office 147, Centurion House,

London Road, Staines-upon-Thames, Surrey, TW18 4AX

VEVOR®

TOUGH TOOLS, HALF PRICE

Tecnico Supporto e certificato di garanzia elettronica

www.vevor.com/support

VEVOR®

TOUGH TOOLS, HALF PRICE

Wsparcie techniczne i certyfikat e-gwarancji www.vevor.com/support

PIASKOWNICA

MODEL: WSB-1200E

We continue to be committed to provide you tools with competitive price.
"Save Half", "Half Price" or any other similar expressions used by us only represents an estimate of savings you might benefit from buying certain tools with us compared to the major top brands and does not necessarily mean to cover all categories of tools offered by us. You are kindly reminded to verify carefully when you are placing an order with us if you are actually saving half in comparison with the top major brands.

VEVOR®
TOUGH TOOLS, HALF PRICE

SANDBOX

MODEL: WSB-1200E

NEED HELP? CONTACT US!

Have product questions? Need technical support? Please feel free to contact us:

Technical Support and E-Warranty Certificate
www.vevor.com/support

This is the original instruction, please read all manual instructions carefully before operating. VEVOR reserves a clear interpretation of our user manual. The appearance of the product shall be subject to the product you received. Please forgive us that we won't inform you again if there are any technology or software updates on our product.

SAFETY INSTRUCTIONS

⚠OSTRZEŻENIE:

11. Przeczytaj uważnie wszystkie instrukcje i zachowaj je na przyszłość.
12. Montowane wyłącznie przez osoby dorosłe . Dzieci powinny używać tego produktu pod nadzorem rodziców.
13. Wszystkie małe części i materiały opakowaniowe tego produktu należy przechowywać z dala od niemowląt i dzieci, w przeciwnym razie mogą stwarzać ryzyko zadławienia.
14. Brak mocowania może spowodować ryzyko przewrócenia się.
15. Nie przeciążaj .

Ostrzeżenie dotyczące montażu:

9. Usuń całe opakowanie, oddziel i policz wszystkie części i sprzęt.

10. Przeczytaj uważnie każdy krok i postępuj zgodnie z odpowiednią kolejnością.
11. Zalecamy, aby, jeśli to możliwe, zmontować wszystkie elementy w pobliżu miejsca, w którym będą używane, aby uniknąć niepotrzebnego przemieszczania produktu po złożeniu.
12. Podczas instalacji należy zapewnić bezpieczną powierzchnię i umieszczać produkt zawsze na płaskiej, stabilnej powierzchni.

MODEL AND PARAMETERS

Model	WSB-1200E
Wiek stosowania	3-12 lat
Maks . nośność	175 funtów (80 kg) /każde
Wygląd	Kwadrat
Rozmiar produktu	133*120*43cm

Kolor	Pomarańczowy czerwony
Materiały	Drewno

PARTS LIST AND INSTALLATION

UWAGA: Sprawdź, czy posiadasz wszystkie części wymienione na liście części.

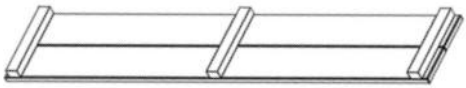 ① X2	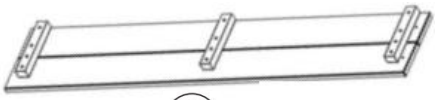 ② X2
③ X2	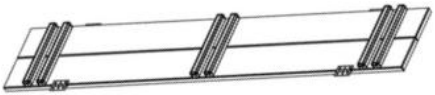 ④ X2
⑤ X4	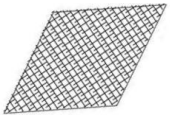 ⑥ X1
⑦ X6	⑧ X6
⑨ X2	Instrukcja obsługi x1

A(M3.5x40):12+1pcs
B(M3.0x35):36+1pcs
C(M3.0x25):8+1pcs
D(M3.0x14):24+1pcs

Instalacja:

KROK 1: Połączyć płytę zrębnicy 5 za pomocą śrub i łączników.
(**UWAGA:** Najlepiej przy użyciu elektronarzędzia.)

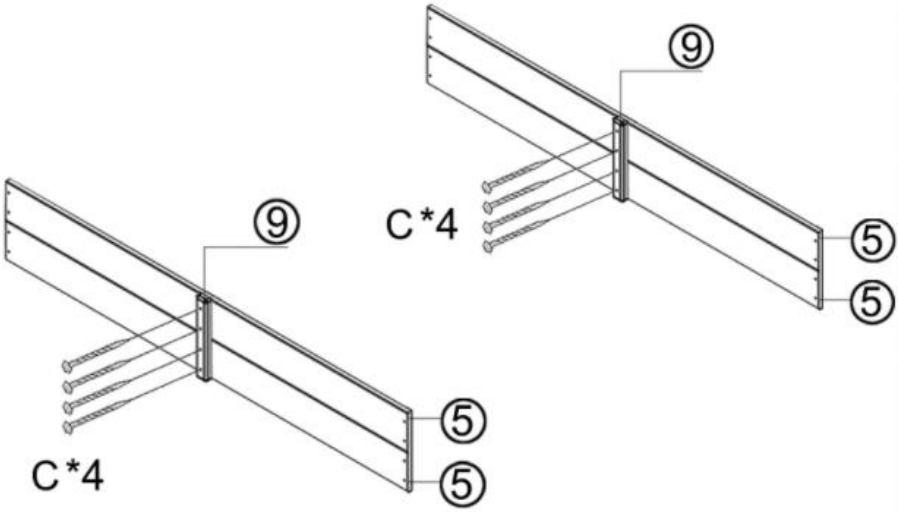

KROK 2: Połącz wszystkie panele zrębowe za pomocą śrub.

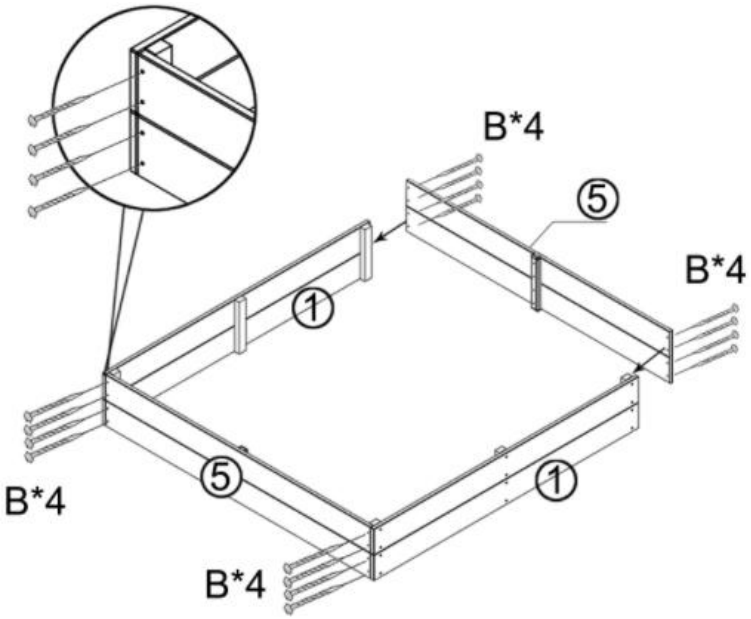

KROK 3: Montaż dolnych płyt siedziska.

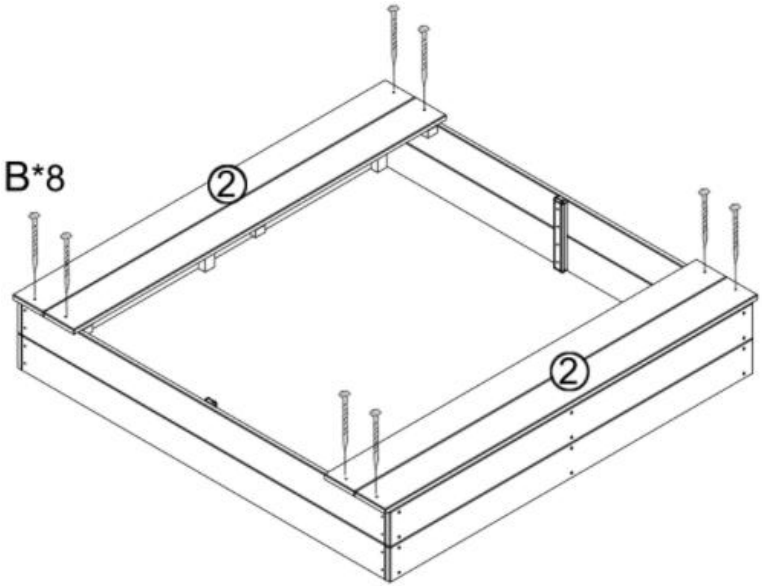

KROK 4: Montaż siedzeń.

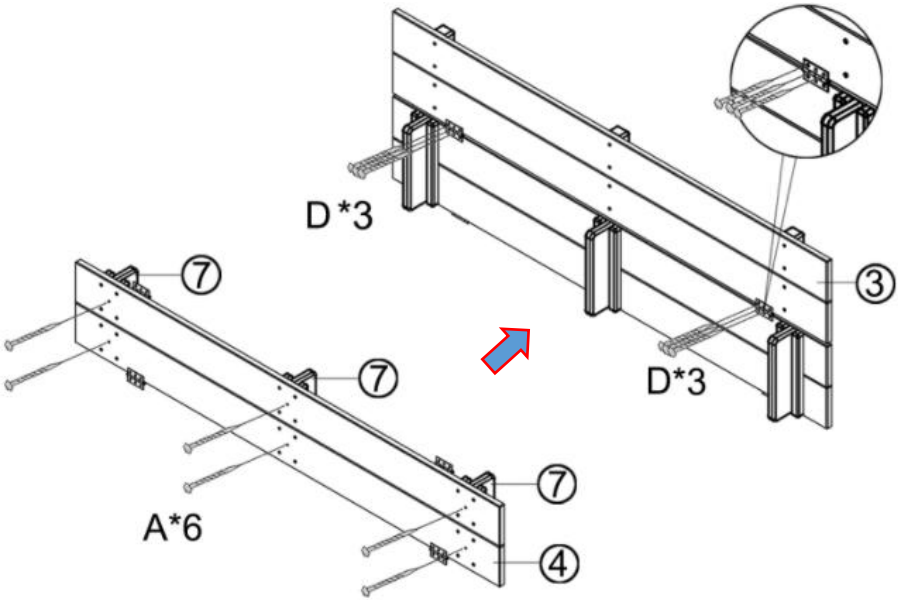

UWAGA: Ten krok należy powtórzyć dwukrotnie.

KROK 5: Zamocuj zawiasy.

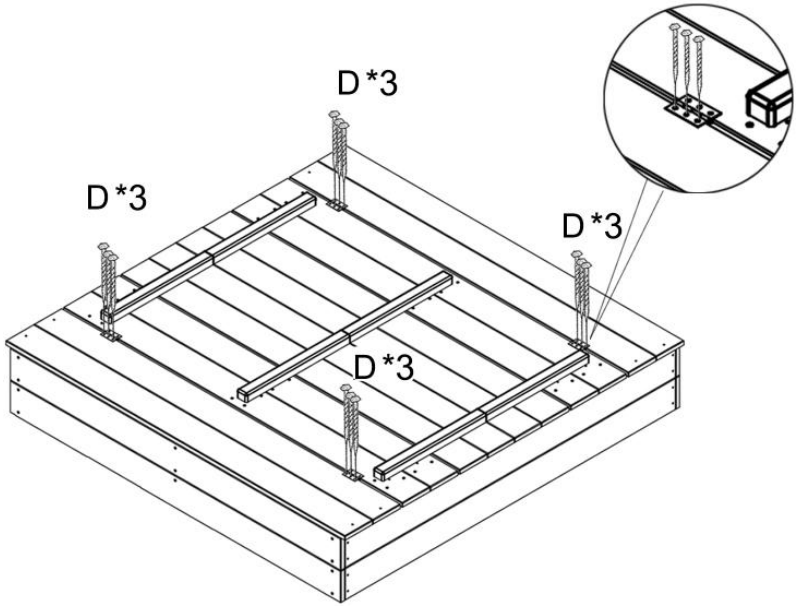

UWAGA: Gdy nie jest używane, siedzisko składa się i zamienia w

pokrywę.

KROK 6: Zamontuj wspornik oparcia i przesuń cały produkt na dolną tkaninę.

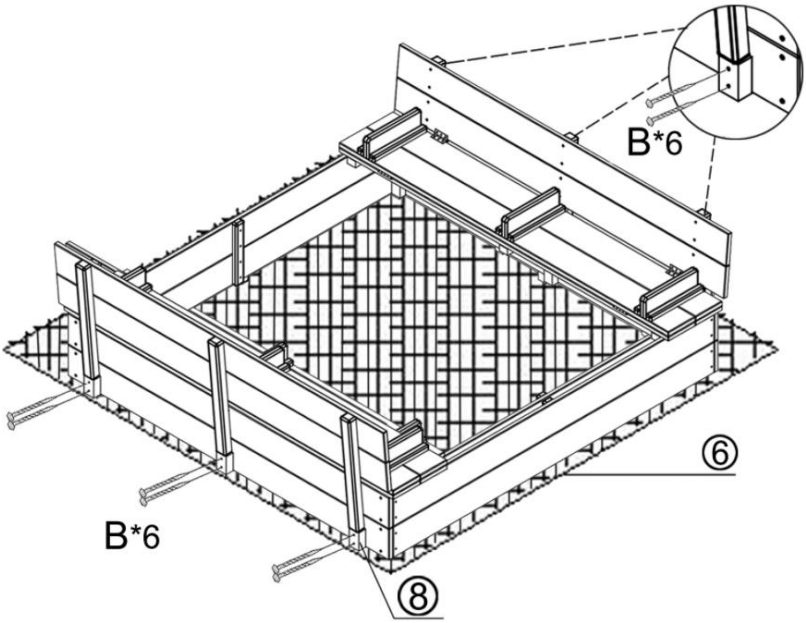

MAINTENANCE

5. Przechowywać z dala od bezpośredniego światła słonecznego .
6. użyciem sprawdź niezawodność części .

Producent: JIANYANG LONGSHENG ARTS CO.,LTD
Adres: BAIDIYUAN, MIASTO JIANGKOU, JIANYANG, FUJIAN, CHINY
Import do AUS: SIHAO PTY LTD. 1 ROKEVA STREETEASTWOOD NSW 2122 Australia
Import do USA: Sanven Technology Ltd. Suite 250, 9166 Anaheim Place, Rancho Cucamonga, CA 91730

UK	REP

E-CrossStu GmbH

Mainzer Landstr.69, 60329 Frankfurt am Main.

EC	REP

YH CONSULTING LIMITED.

C/O YH Consulting Limited Office 147, Centurion House,

London Road, Staines-upon-Thames, Surrey, TW18 4AX

VEVOR®

TOUGH TOOLS, HALF PRICE

Techniczny Certyfikat wsparcia i e-gwarancji

www.vevor.com/support

VEVOR®

TOUGH TOOLS, HALF PRICE

Technischer Support und E-Garantiezertifikat www.vevor.com/support

SANDKASTEN

MODELL:WSB-1200E

We continue to be committed to provide you tools with competitive price.
"Save Half", "Half Price" or any other similar expressions used by us only represents an estimate of savings you might benefit from buying certain tools with us compared to the major top brands and does not necessarily mean to cover all categories of tools offered by us. You are kindly reminded to verify carefully when you are placing an order with us if you are actually saving half in comparison with the top major brands.

VEVOR®
TOUGH TOOLS, HALF PRICE

SANDBOX

MODELL: WSB-1200E

NEED HELP? CONTACT US!

Have product questions? Need technical support? Please feel free to contact us:

Technical Support and E-Warranty Certificate
www.vevor.com/support

This is the original instruction, please read all manual instructions carefully before operating. VEVOR reserves a clear interpretation of our user manual. The appearance of the product shall be subject to the product you received. Please forgive us that we won't inform you again if there are any technology or software updates on our product.

SAFETY INSTRUCTIONS

⚠**WARNUNG:**

16. Bitte lesen Sie alle Anweisungen sorgfältig durch und bewahren Sie sie zum späteren Nachschlagen auf.
17. Zusammenbau nur durch Erwachsene . Kinder sollten dieses Produkt unter Aufsicht der Eltern verwenden.
18. Halten Sie alle Kleinteile und Verpackungsmaterialien dieses Produkts von Babys und Kindern fern, da sie sonst eine Erstickungsgefahr darstellen können.
19. Fehlende Befestigung kann zu Kippgefahr führen.
20. Nicht überladen .

Warnung zur Montage:

13. Entfernen Sie sämtliche Verpackungen, trennen und zählen Sie alle Teile und Hardware.
14. Lesen Sie jeden Schritt sorgfältig durch und befolgen Sie die richtige Reihenfolge.
15. Wir empfehlen, alle Artikel nach Möglichkeit in der Nähe des Einsatzbereichs zu montieren, um zu vermeiden, dass das Produkt nach dem Zusammenbau unnötig bewegt wird.
16. Sorgen Sie bei der Installation für einen sicheren Untergrund und stellen Sie das Produkt immer auf eine ebene, stabile und stabile Oberfläche.

MODEL AND PARAMETERS

Modell	WSB-1200E
Alter der Bewerbung	3-12 Jahre
Max . Tragfähigkeit	80 kg (175 lbs) /jeder Sitz
Aussehen	Quadrat

Produktgröße	133*120*43cm
Farbe	Orange Rot
Materialien	Holz

PARTS LIST AND INSTALLATION

HINWEIS: Bitte überprüfen Sie, ob alle in der Teileliste aufgeführten Teile vorhanden sind.

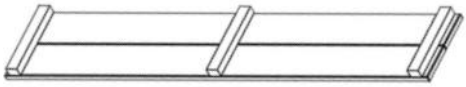 ① X2	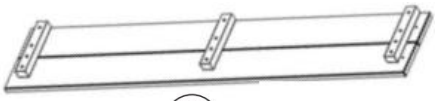 ② X2
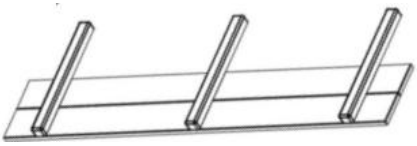 ③ X2	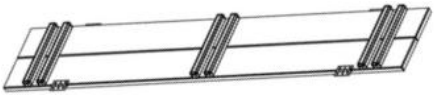 ④ X2
⑤ X4	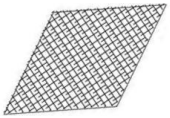 ⑥ X1
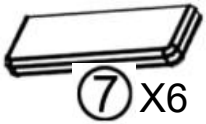 ⑦ X6	⑧ X6
⑨ X2	Benutzerhandbuch x1

A(M3.5x40):12+1pcs
B(M3.0x35):36+1pcs
C(M3.0x25):8+1pcs
D(M3.0x14):24+1pcs

Installation:

SCHRITT 1: Süllplatte 5 mit Schrauben und Verbindungsblöcken verbinden.
(**HINWEIS:** Vorzugsweise mit einem Elektrowerkzeug.)

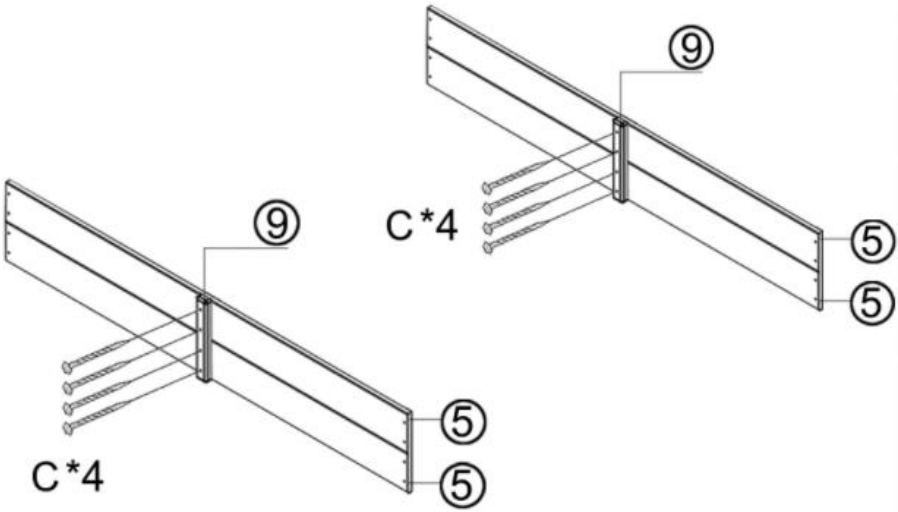

SCHRITT 2: Alle Süllplatten mit Schrauben verbinden.

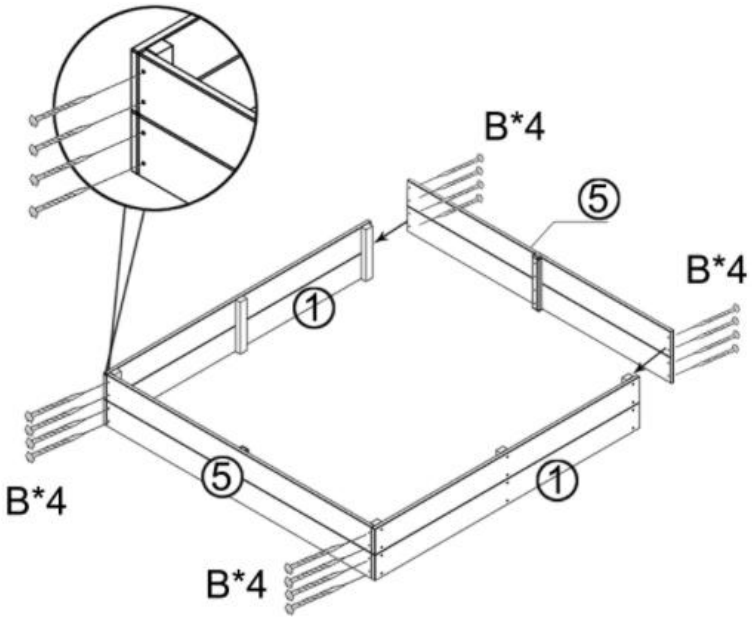

SCHRITT 3: Montage der Sitzbodenplatten.

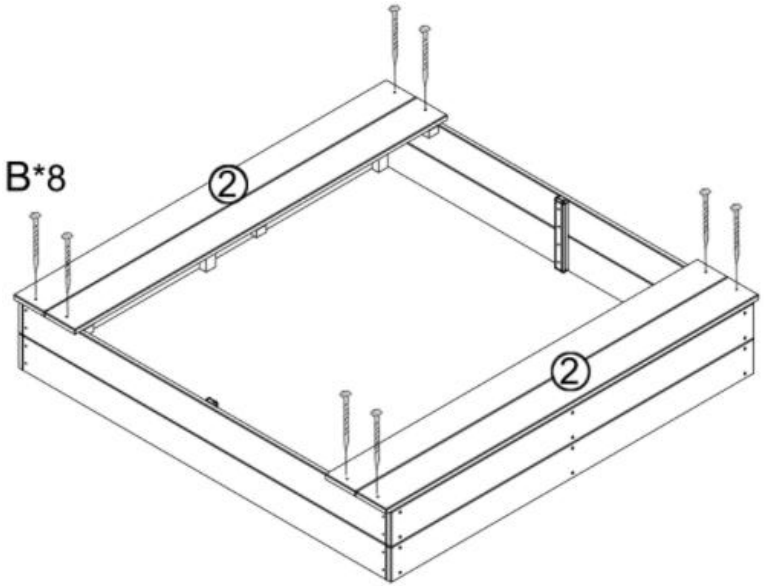

SCHRITT 4: Montage der Sitze.

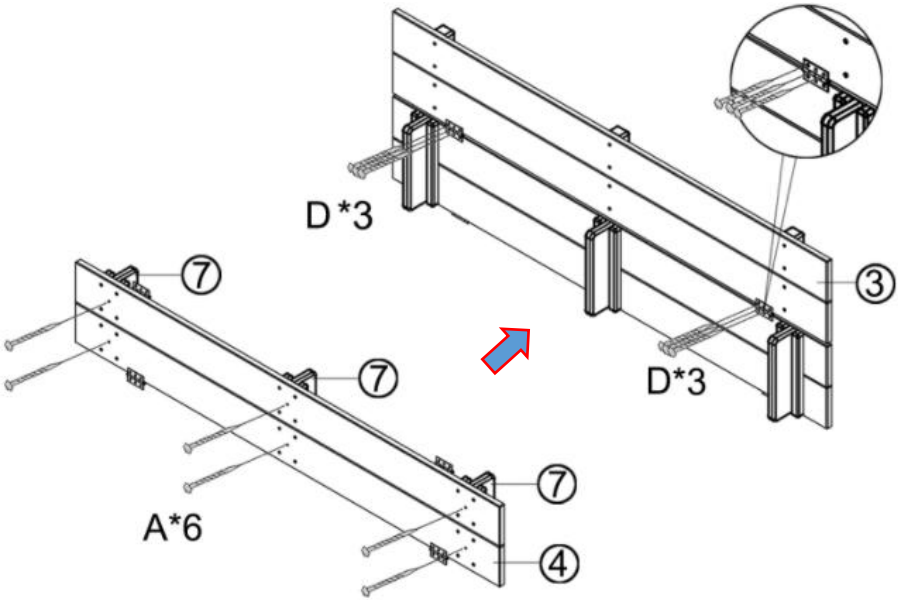

HINWEIS: Dieser Schritt muss zweimal wiederholt werden.

SCHRITT 5: Befestigen Sie die Scharniere.

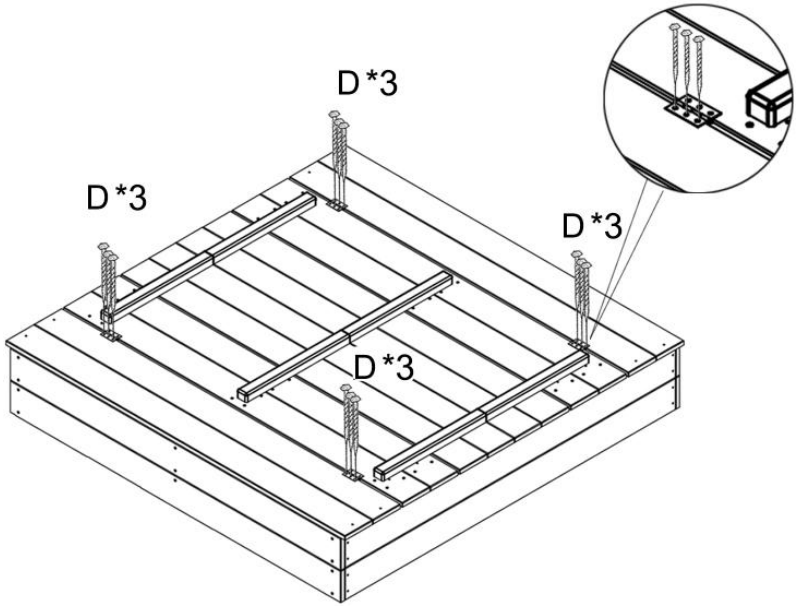

HINWEIS: Der Sitz lässt sich zusammenklappen und bei Nichtgebrauch in

einen Deckel verwandeln.

SCHRITT 6: Installieren Sie den Stützblock für die Rückenlehne und verschieben Sie das gesamte Produkt auf das Untertuch.

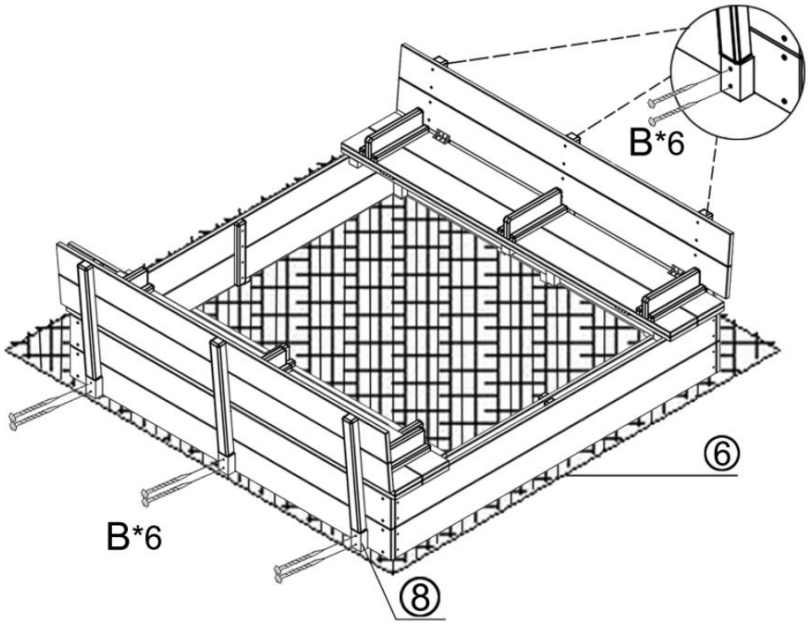

MAINTENANCE

7. Vor direkter Sonneneinstrahlung schützen .
8. Überprüfen Sie vor der Verwendung die Zuverlässigkeit der Teile .

Hersteller: JIANYANG LONGSHENG ARTS CO., LTD
Adresse: BAIDIYUAN, STADT JIANGKOU, JIANYANG, FUJIAN, CHINA
Importiert nach AUS: SIHAO PTY LTD. 1 ROKEVA STREETEASTWOOD NSW 2122 Australien
In die USA importiert: Sanven Technology Ltd. Suite 250, 9166 Anaheim Place, Rancho Cucamonga, CA 91730

UK	REP

E-CrossStu GmbH

Mainzer Landstr.69, 60329 Frankfurt am Main.

EC	REP

YH CONSULTING LIMITED.

C/O YH Consulting Limited Office 147, Centurion House,

London Road, Staines-upon-Thames, Surrey, TW18 4AX

VEVOR®

TOUGH TOOLS, HALF PRICE

Technisch Support- und E-Garantiezertifikat

www.vevor.com/support

VEVOR®

TOUGH TOOLS, HALF PRICE

Assistance technique et certificat de garantie électronique www.vevor.com/support

BAC À SABLE

MODÈLE : WSB-1200E

We continue to be committed to provide you tools with competitive price.
"Save Half", "Half Price" or any other similar expressions used by us only represents an estimate of savings you might benefit from buying certain tools with us compared to the major top brands and does not necessarily mean to cover all categories of tools offered by us. You are kindly reminded to verify carefully when you are placing an order with us if you are actually saving half in comparison with the top major brands.

VEVOR®
TOUGH TOOLS, HALF PRICE

SANDBOX

MODÈLE : WSB-1200E

NEED HELP? CONTACT US!

Have product questions? Need technical support? Please feel free to contact us:

Technical Support and E-Warranty Certificate
www.vevor.com/support

This is the original instruction, please read all manual instructions carefully before operating. VEVOR reserves a clear interpretation of our user manual. The appearance of the product shall be subject to the product you received. Please forgive us that we won't inform you again if there are any technology or software updates on our product.

SAFETY INSTRUCTIONS

⚠AVERTISSEMENT:

21. Veuillez lire attentivement toutes les instructions et les conserver pour référence future.
22. Assemblé uniquement par des adultes . Les enfants doivent utiliser ce produit sous la surveillance parentale.
23. Gardez toutes les petites pièces et matériaux d'emballage de ce produit hors de portée des bébés et des enfants, sinon ils pourraient présenter un risque d'étouffement.
24. Un manque de fixation peut entraîner un risque de basculement.
25. Ne surchargez pas .

Avertissement pour l'assemblage :

17. Retirez tous les emballages, séparez et comptez toutes les pièces et le matériel.
18. Lisez attentivement chaque étape et suivez l'ordre approprié.
19. Nous recommandons que, dans la mesure du possible, tous les articles soient assemblés à proximité de la zone dans laquelle ils seront utilisés, afin d'éviter de déplacer inutilement le produit une fois assemblé.
20. Assurez-vous d'avoir une surface sûre lors de l'installation et placez toujours le produit sur une surface plane, stable et stable.

MODEL AND PARAMETERS

Modèle	WSB-1200E
Âge de candidature	3-12 ans
Max . capacité portante	175 lb (80 kg) /Chaque siège
Apparence	Carré
Taille du produit	133*120*43cm

Couleur	Rouge-orange
Matériaux	Bois

PARTS LIST AND INSTALLATION

REMARQUE : Veuillez vérifier que vous disposez de toutes les pièces indiquées dans la liste des pièces.

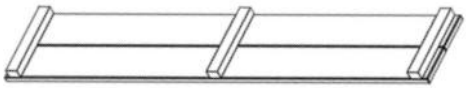 ① X2	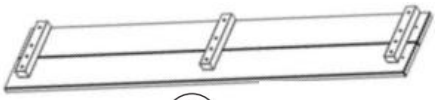 ② X2
③ X2	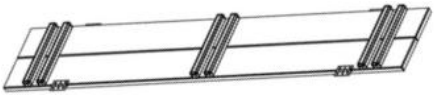 ④ X2
⑤ X4	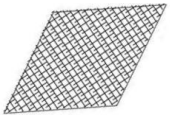 ⑥ X1
⑦ X6	⑧ X6
⑨ X2	Manuel d'utilisation x1

	A(M3.5x40):12+1pcs B(M3.0x35):36+1pcs C(M3.0x25):8+1pcs D(M3.0x14):24+1pcs

Installation:

ÉTAPE 1 : Raccordez la plaque d'hiloire 5 avec des vis et des blocs de connexion.

(**REMARQUE :** utilisez de préférence un outil électrique.)

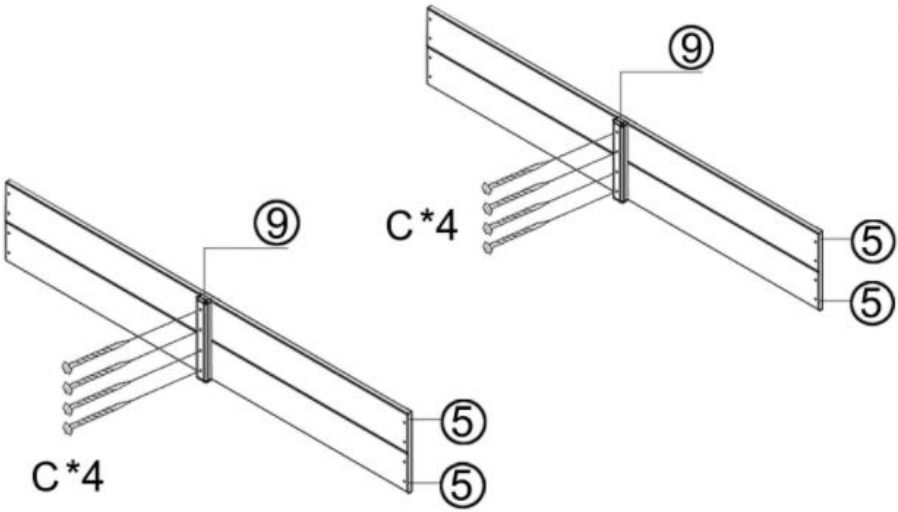

ÉTAPE 2 : Épissez tous les panneaux surbau avec des vis.

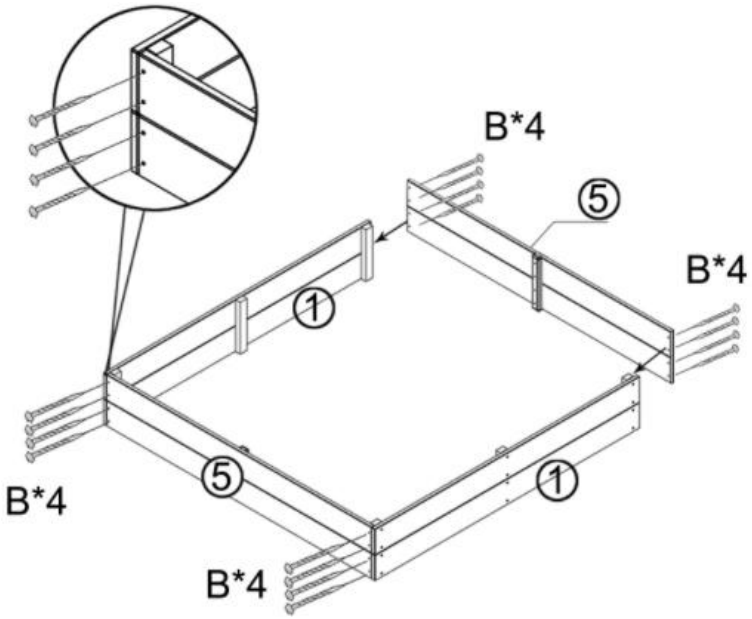

ÉTAPE 3 : Montage des plaques inférieures du siège.

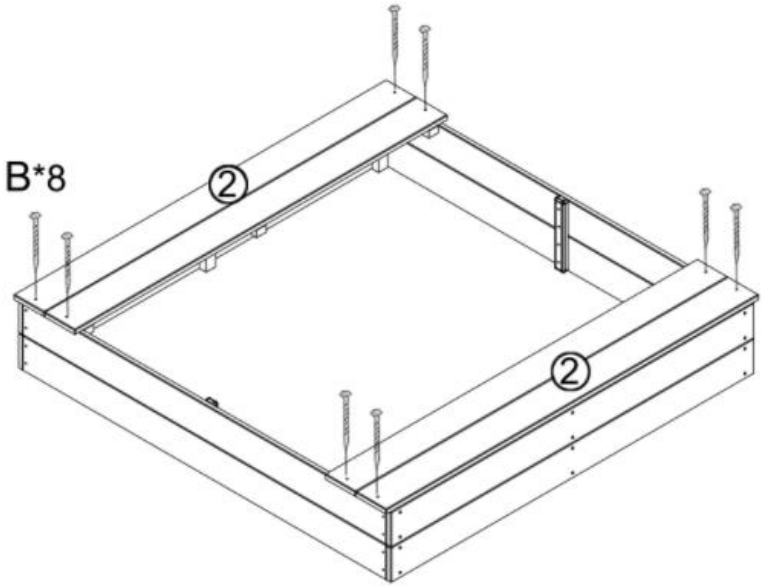

ÉTAPE 4 : Montage des sièges.

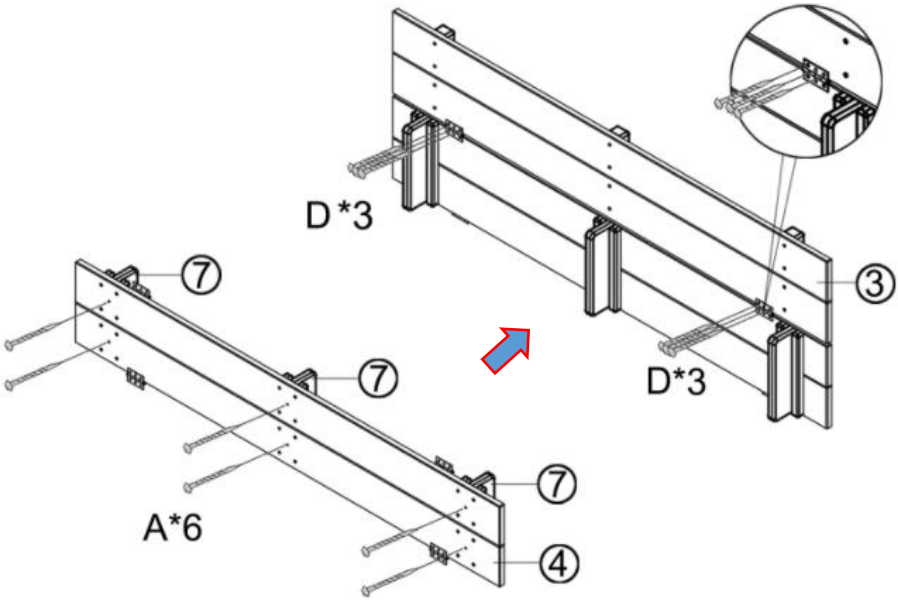

REMARQUE : Cette étape doit être répétée deux fois.

ÉTAPE 5 : Fixez les charnières.

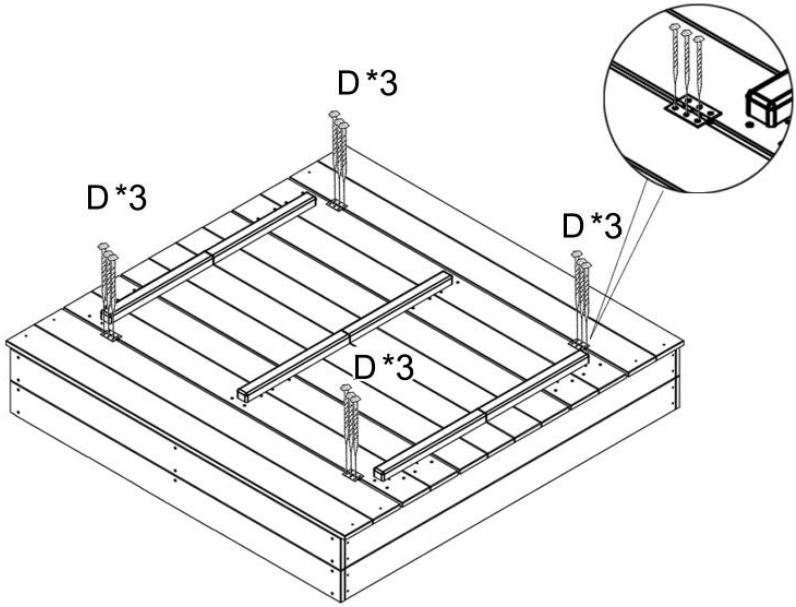

REMARQUE : Le siège se plie et se transforme en couvercle lorsqu'il n'est

pas utilisé.

ÉTAPE 6 : Installez le bloc de support du dossier et déplacez l'ensemble du produit sur le tissu inférieur.

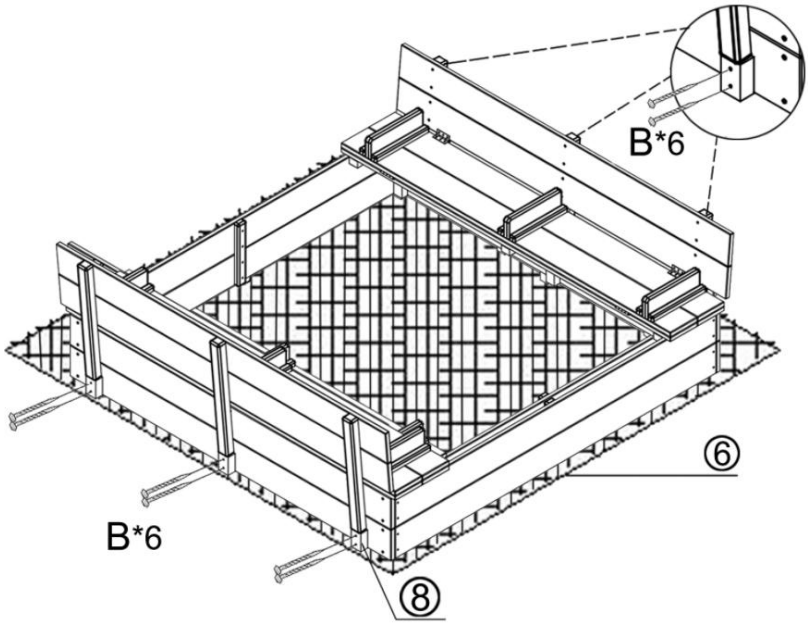

MAINTENANCE

9. Entreposer à l'écart de la lumière du soleil .
10. Vérifiez la fiabilité des pièces avant utilisation.

Fabricant: JIANYANG LONGSHENG ARTS CO., LTD
Adresse : BAIDIYUAN, VILLE DE JIANGKOU, JIANYANG, FUJIAN, CHINE
Importé en Australie : SIHAO PTY LTD. 1 ROKEVA STREETASTWOOD NSW 2122 Australie
Importé aux États-Unis : Sanven Technology Ltd. Suite 250, 9166 Anaheim Place, Rancho Cucamonga, CA 91730

UK	REP

E-CrossStu GmbH

Mainzer Landstr.69, 60329 Frankfurt am Main.

EC	REP

YH CONSULTING LIMITED.

C/O YH Consulting Limited Office 147, Centurion House,

London Road, Staines-upon-Thames, Surrey, TW18 4AX

VEVOR®

TOUGH TOOLS, HALF PRICE

Technique Assistance et certificat de garantie électronique

www.vevor.com/support

VEVOR®

TOUGH TOOLS, HALF PRICE

Technische ondersteuning en e-garantiecertificaat www.vevor.com/support

ZANDBOX

MODEL: WSB-1200E

We continue to be committed to provide you tools with competitive price.
"Save Half", "Half Price" or any other similar expressions used by us only represents an estimate of savings you might benefit from buying certain tools with us compared to the major top brands and does not necessarily mean to cover all categories of tools offered by us. You are kindly reminded to verify carefully when you are placing an order with us if you are actually saving half in comparison with the top major brands.

VEVOR®
TOUGH TOOLS, HALF PRICE

SANDBOX

MODEL: WSB-1200E

NEED HELP? CONTACT US!

Have product questions? Need technical support? Please feel free to contact us:

Technical Support and E-Warranty Certificate
www.vevor.com/support

This is the original instruction, please read all manual instructions carefully before operating. VEVOR reserves a clear interpretation of our user manual. The appearance of the product shall be subject to the product you received. Please forgive us that we won't inform you again if there are any technology or software updates on our product.

SAFETY INSTRUCTIONS

⚠WAARSCHUWING:

26. Lees alle instructies zorgvuldig door en bewaar deze voor toekomstig gebruik.
27. Alleen door volwassenen gemonteerd . Kinderen moeten dit product gebruiken onder ouderlijk toezicht.
28. Houd alle kleine onderdelen en verpakkingsmaterialen van dit product uit de buurt van baby's en kinderen, anders kunnen ze verstikkingsgevaar opleveren.
29. Een gebrek aan bevestiging kan een risico op kantelen veroorzaken.
30. Niet overbelasten .

Waarschuwing voor montage:

21. Verwijder alle verpakking, scheid en tel alle onderdelen en hardware.
22. Lees elke stap aandachtig door en volg de juiste volgorde.
23. Wij adviseren dat, waar mogelijk, alle artikelen worden gemonteerd in de buurt van de ruimte waar ze in gebruik zullen worden genomen, om te voorkomen dat het product na montage onnodig wordt verplaatst.
24. Zorg voor een veilige ondergrond tijdens de installatie en plaats het product altijd op een vlakke, stabiele en stabiele ondergrond.

MODEL AND PARAMETERS

Model	WSB-1200E
Leeftijd van aanmelding	3-12 jaar
Max . draagvermogen	175 lbs (80 kg) /elke stoel
Verschijning	Vierkant
Product grootte	133*120*43cm
Kleur	Oranje rood

Materialen	Hout

PARTS LIST AND INSTALLATION

OPMERKING: Controleer of u alle onderdelen heeft, zoals weergegeven in de onderdelenlijst.

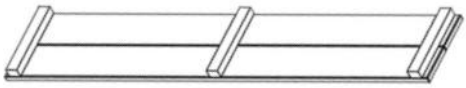 ① X2	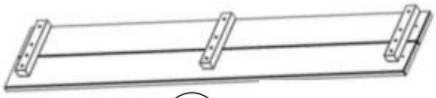 ② X2
③ X2	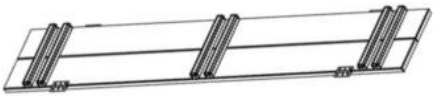 ④ X2
⑤ X4	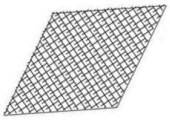 ⑥ X1
⑦ X6	⑧ X6
⑨ X2	Gebruikershandleiding x1

A(M3.5x40):12+1pcs
B(M3.0x35):36+1pcs
C(M3.0x25):8+1pcs
D(M3.0x14):24+1pcs

Installatie:

STAP 1: Verbind de mantelplaat 5 met schroeven en verbindingsblokken.
(**LET OP:** gebruik bij voorkeur elektrisch gereedschap.)

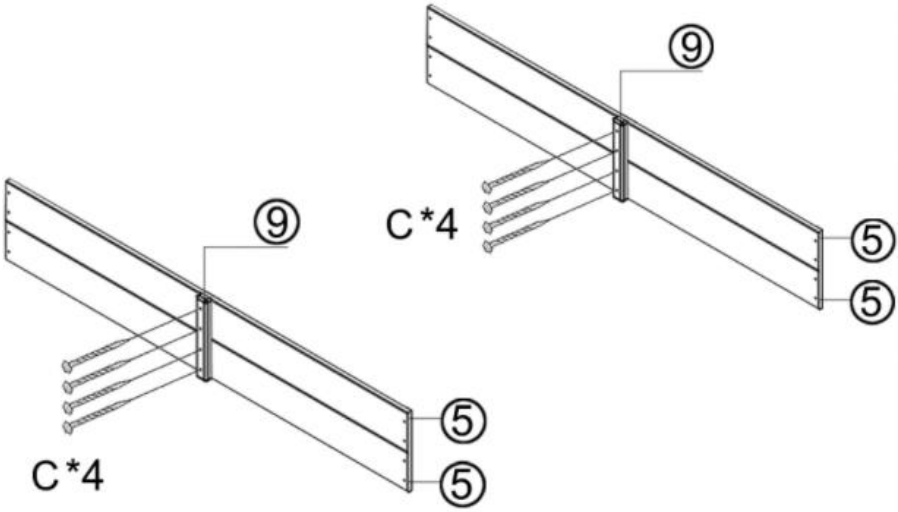

STAP 2: Verbind alle dakrandpanelen met schroeven.

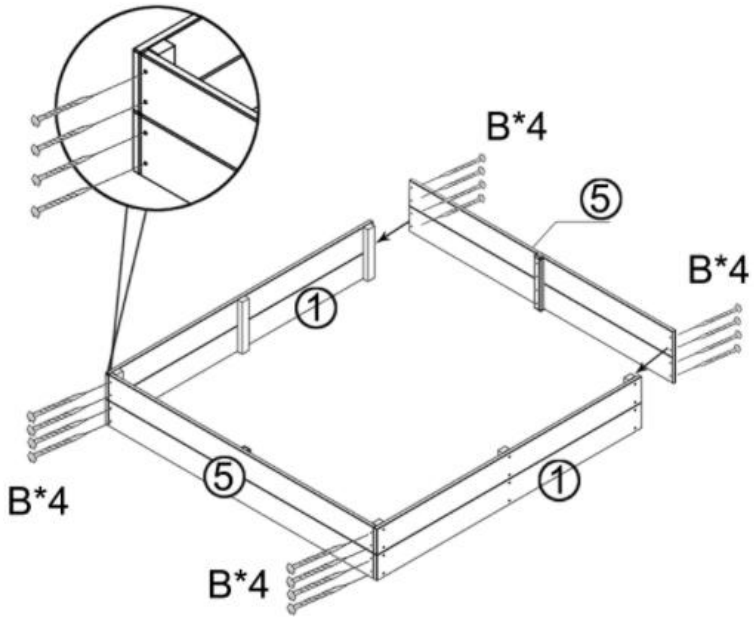

STAP 3: Montage van de bodemplaten van de stoel.

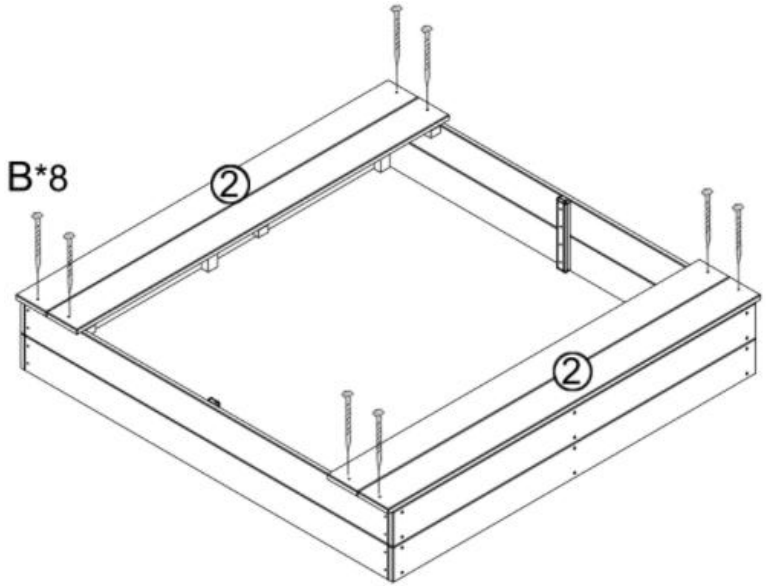

STAP 4: Monteren van de stoelen.

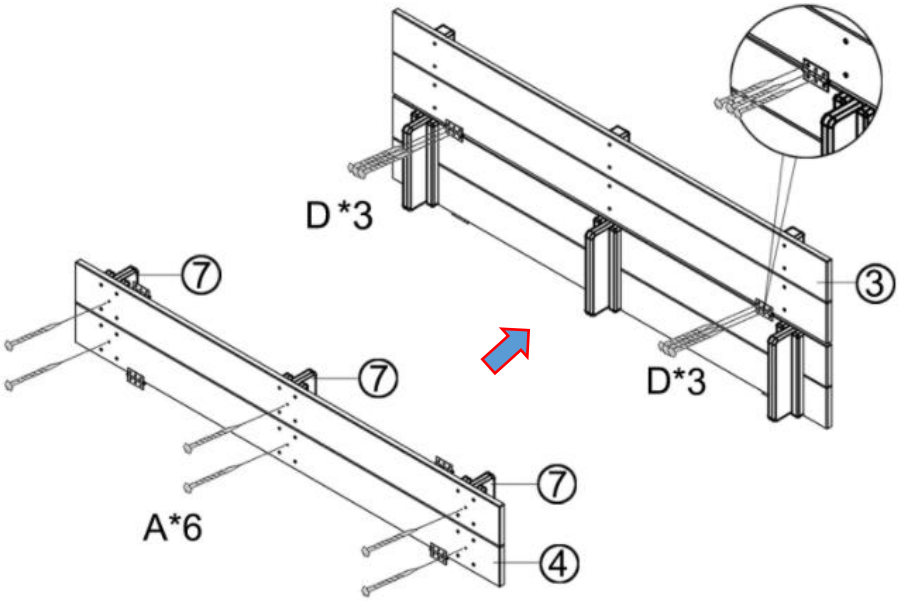

OPMERKING: Deze stap moet tweemaal worden herhaald.

STAP 5: Zet de scharnieren vast.

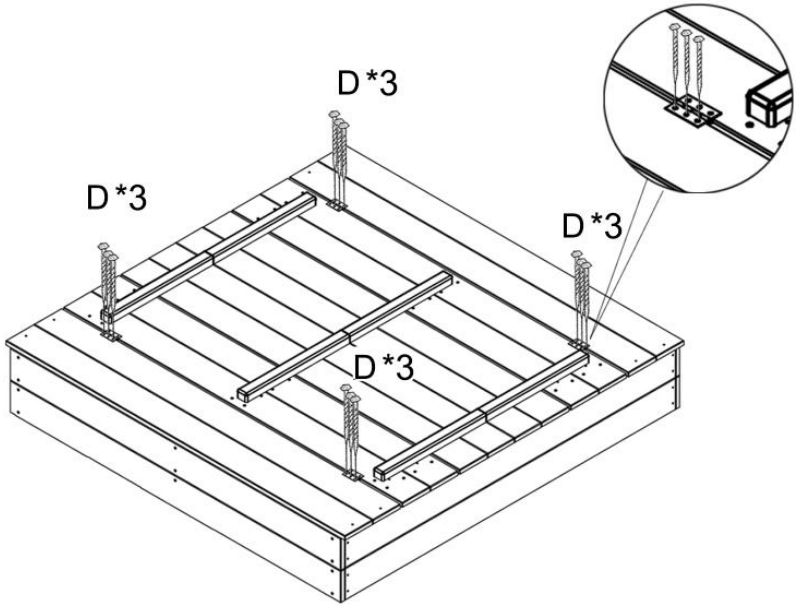

OPMERKING: De stoel kan worden ingeklapt en verandert in een deksel

wanneer deze niet wordt gebruikt.

STAP 6: Installeer het steunblok van de rugleuning en verplaats het hele product op de onderste stof.

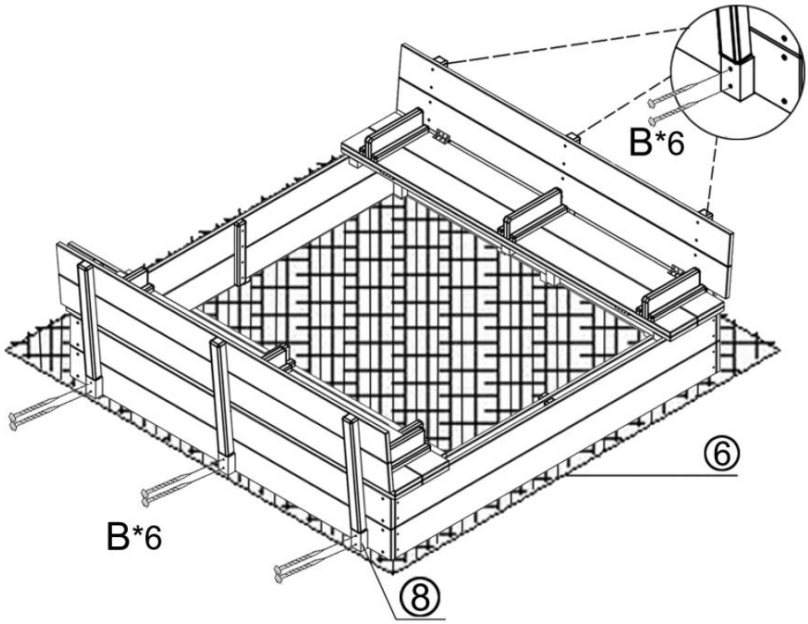

MAINTENANCE

11. Buiten direct zonlicht bewaren .
12. gebruik de betrouwbaarheid van de onderdelen .

Fabrikant: JIANYANG LONGSHENG ARTS CO.,LTD
Adres: BAIDIYUAN, JIANGKOU STAD, JIANYANG, FUJIAN, CHINA
Geïmporteerd naar AUS: SIHAO PTY LTD. 1 ROKEVA STREETEASTWOOD NSW 2122 Australië
Geïmporteerd naar de VS: Sanven Technology Ltd. Suite 250, 9166 Anaheim Place, Rancho Cucamonga, CA 91730

UK	REP

E-CrossStu GmbH

Mainzer Landstr.69, 60329 Frankfurt am Main.

EC	REP

YH CONSULTING LIMITED.

C/O YH Consulting Limited Office 147, Centurion House,

London Road, Staines-upon-Thames, Surrey, TW18 4AX

VEVOR®

TOUGH TOOLS, HALF PRICE

Technisch Ondersteuning en e-garantiecertificaat

www.vevor.com/support

VEVOR®

TOUGH TOOLS, HALF PRICE

Teknisk support och e-garanticertifikat www.vevor.com/support

SANDLÅDA

MODELL: WSB-1200E

We continue to be committed to provide you tools with competitive price.
"Save Half", "Half Price" or any other similar expressions used by us only represents an estimate of savings you might benefit from buying certain tools with us compared to the major top brands and does not necessarily mean to cover all categories of tools offered by us. You are kindly reminded to verify carefully when you are placing an order with us if you are actually saving half in comparison with the top major brands.

VEVOR®
TOUGH TOOLS, HALF PRICE

SANDBOX

MODELL: WSB-1200E

NEED HELP? CONTACT US!

Have product questions? Need technical support? Please feel free to contact us:

Technical Support and E-Warranty Certificate
www.vevor.com/support

This is the original instruction, please read all manual instructions carefully before operating. VEVOR reserves a clear interpretation of our user manual. The appearance of the product shall be subject to the product you received. Please forgive us that we won't inform you again if there are any technology or software updates on our product.

SAFETY INSTRUCTIONS

⚠**VARNING:**

31. Läs alla instruktioner noggrant och spara dem för framtida referens.
32. Monteras endast av vuxna . Barn bör använda denna produkt under överinseende av föräldrar.
33. Håll alla små delar och förpackningsmaterial för denna produkt borta från spädbarn och barn, annars kan de utgöra en kvävningsrisk.
34. Brist på infästning kan orsaka tippningsrisk.
35. Överbelasta inte .

Varning för montering:

25. Ta bort all förpackning, separera och räkna alla delar och hårdvara.
26. Läs igenom varje steg noggrant och följ rätt ordning.
27. Vi rekommenderar att, där det är möjligt, alla föremål monteras nära det område där de kommer att användas, för att undvika att produkten flyttas i onödan när den väl har monterats.
28. Säkerställ en säker yta under installationen och placera alltid produkten på en plan, stadig och stabil yta.

MODEL AND PARAMETERS

Modell	WSB-1200E
Ansökningsålder	3-12 år
Max . bärkraft	175 lbs (80 kg) / Varje säte
Utseende	Fyrkant
Produktstorlek	133*120*43 cm
Färg	Orange röd
Material	Trä

PARTS LIST AND INSTALLATION

OBS: Kontrollera att du har alla delar som visas i dellistan.

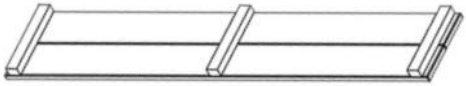 ① X2	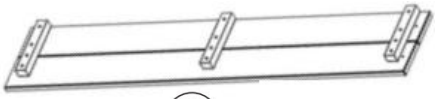 ② X2
③ X2	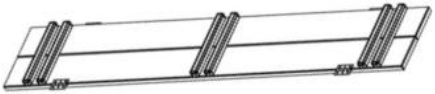 ④ X2
⑤ X4	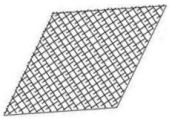 ⑥ X1
⑦ X6	⑧ X6
⑨ X2	Användarmanual x1
	A(M3.5x40):12+1pcs B(M3.0x35):36+1pcs C(M3.0x25):8+1pcs D(M3.0x14):24+1pcs

Installation:

STEG 1: Skarva karmplattan 5 med skruvar och anslutningsblock.
(**OBS:** Använd helst ett elverktyg.)

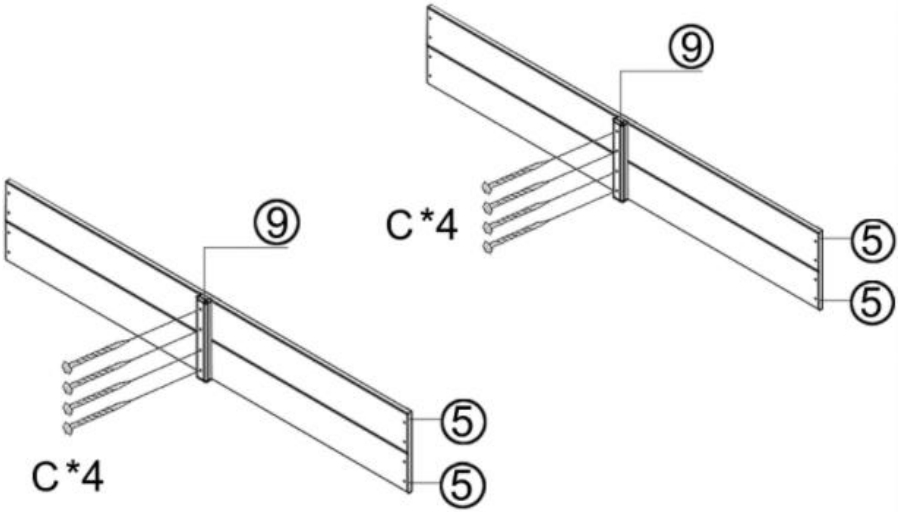

STEG 2: Skarva alla karmpaneler med skruvar.

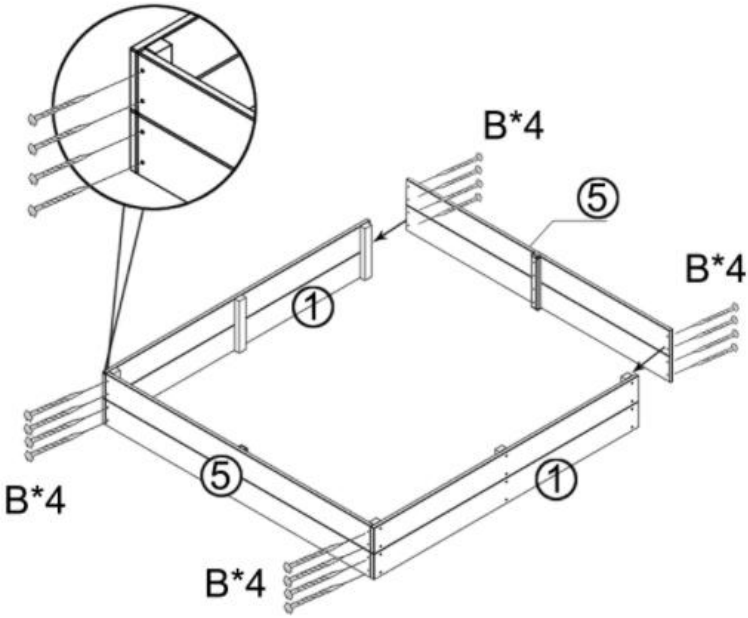

STEG 3: Montera sitsens bottenplattor.

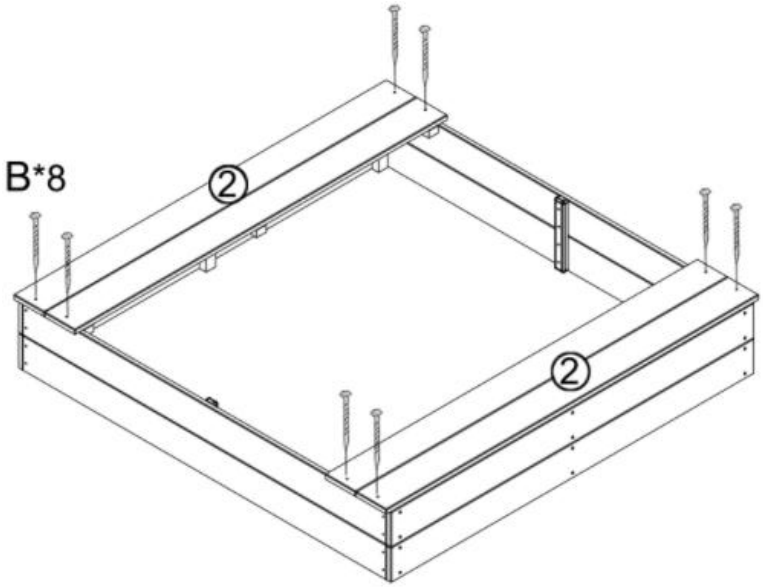

STEG 4: Montera sätena.

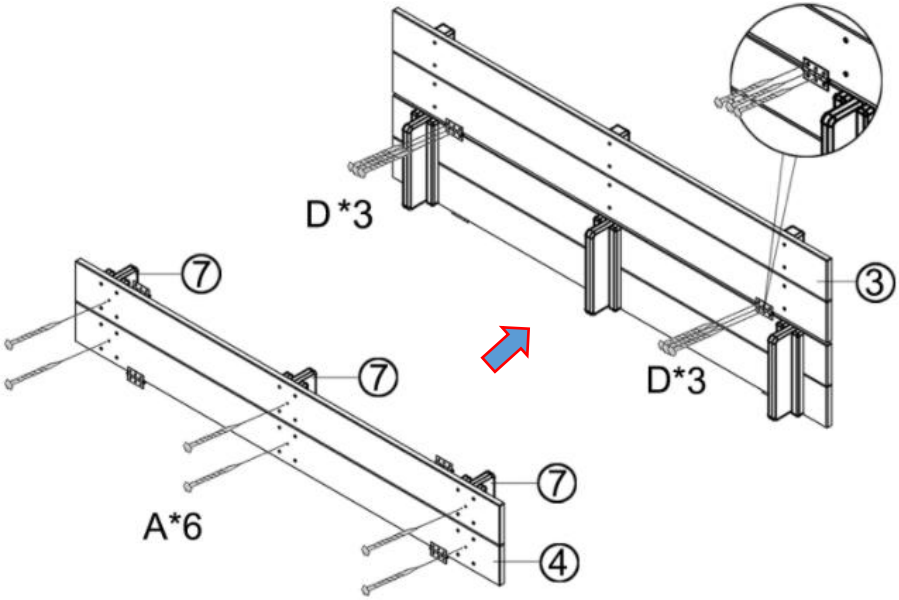

OBS: Detta steg måste upprepas två gånger.

STEG 5: Fäst gångjärnen.

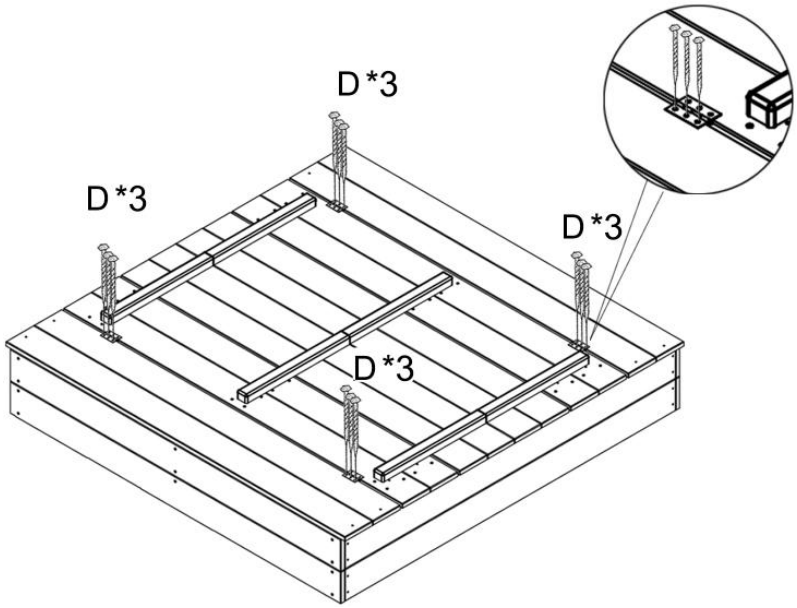

OBS: Sätet fälls ihop och förvandlas till ett lock när det inte används.

STEG 6: Installera ryggstödsblocket och flytta hela produkten på bottenduken.

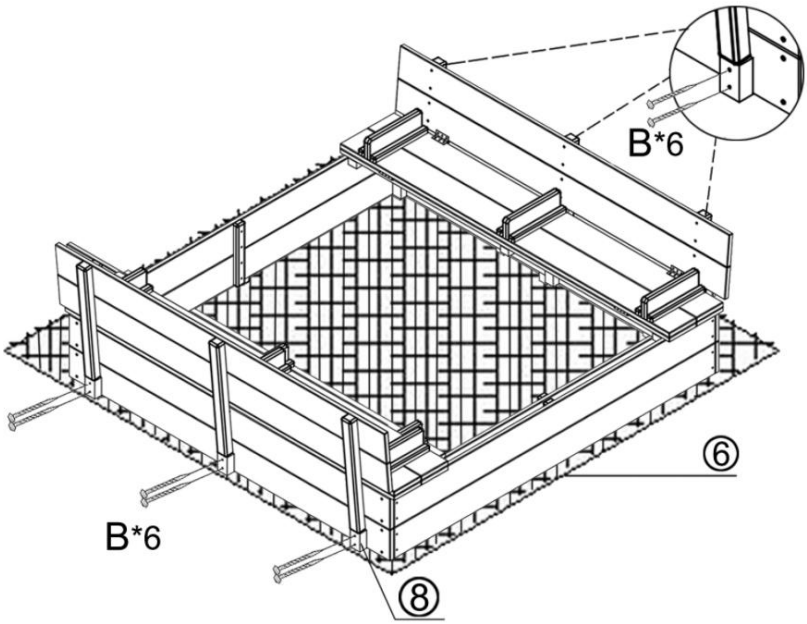

MAINTENANCE

13. Förvaras åtskilt från direkt solljus .
14. Kontrollera delarnas tillförlitlighet före användning.

Tillverkare: JIANYANG LONGSHENG ARTS CO.,LTD
Adress: BAIDIYUAN,JIANGKOU TOWN,JIANYANG,FUJIAN,KINA
Importerad till AUS: SIHAO PTY LTD. 1 ROKEVA STREETEASTWOOD NSW 2122 Australien
Importerad till USA: Sanven Technology Ltd. Suite 250, 9166 Anaheim Place, Rancho Cucamonga, CA 91730

UK	REP

E-CrossStu GmbH
Mainzer Landstr.69, 60329 Frankfurt am Main.

EC	REP

YH CONSULTING LIMITED.
C/O YH Consulting Limited Office 147, Centurion House,
London Road, Staines-upon-Thames, Surrey, TW18 4AX

VEVOR®

TOUGH TOOLS, HALF PRICE

Teknisk Support och e-garanticertifikat

www.vevor.com/support

VEVOR®

TOUGH TOOLS, HALF PRICE

Soporte técnico y certificado de garantía electrónica www.vevor.com/support

SALVADERA

MODELO:WSB-1200E

We continue to be committed to provide you tools with competitive price.
"Save Half", "Half Price" or any other similar expressions used by us only represents an estimate of savings you might benefit from buying certain tools with us compared to the major top brands and does not necessarily mean to cover all categories of tools offered by us. You are kindly reminded to verify carefully when you are placing an order with us if you are actually saving half in comparison with the top major brands.

VEVOR®
TOUGH TOOLS, HALF PRICE

SANDBOX

MODELO: WSB-1200E

NEED HELP? CONTACT US!

Have product questions? Need technical support? Please feel free to contact us:

Technical Support and E-Warranty Certificate
www.vevor.com/support

This is the original instruction, please read all manual instructions carefully before operating. VEVOR reserves a clear interpretation of our user manual. The appearance of the product shall be subject to the product you received. Please forgive us that we won't inform you again if there are any technology or software updates on our product.

SAFETY INSTRUCTIONS

⚠ADVERTENCIA:

36. Lea atentamente todas las instrucciones y consérvelas para consultarlas en el futuro.
37. Montado sólo por adultos . Los niños deben utilizar este producto bajo la supervisión de sus padres.
38. Mantenga todas las piezas pequeñas y los materiales de embalaje de este producto fuera del alcance de bebés y niños; de lo contrario, pueden representar un peligro de asfixia.
39. La falta de fijación puede provocar riesgo de vuelco.
40. No sobrecargues .

Advertencia para el montaje:

29. Retire todo el embalaje, separe y cuente todas las piezas y herrajes.
30. Lea atentamente cada paso y siga el orden correcto.
31. Recomendamos que, siempre que sea posible, todos los artículos se monten cerca del área en la que se utilizarán, para evitar mover el producto innecesariamente una vez montado.
32. Asegure una superficie segura durante la instalación y coloque el producto siempre sobre una superficie plana, firme y estable.

MODEL AND PARAMETERS

Modelo	WSB-1200E
Edad de aplicación	3-12 años
Máximo . capacidad de carga	175 libras (80 kg) /Cada asiento
Apariencia	Cuadrado
Tamaño del producto	133*120*43cm
Color	Rojo naranja

Materiales	Madera

PARTS LIST AND INSTALLATION

NOTA: Verifique que tenga todas las piezas como se muestra en la lista de piezas.

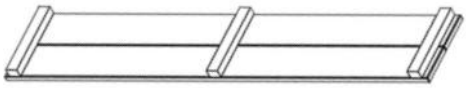 ① X2	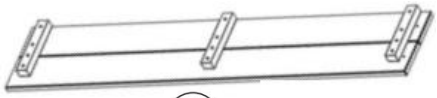 ② X2
③ X2	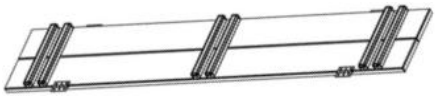 ④ X2
⑤ X4	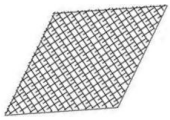 ⑥ X1
⑦ X6	⑧ X6
⑨ X2	Manual de usuario x1

	A(M3.5x40):12+1pcs B(M3.0x35):36+1pcs C(M3.0x25):8+1pcs D(M3.0x14):24+1pcs

Instalación:

PASO 1: Empalme la placa de brazola 5 con tornillos y bloques de conexión.

(**NOTA:** Preferiblemente usando una herramienta eléctrica).

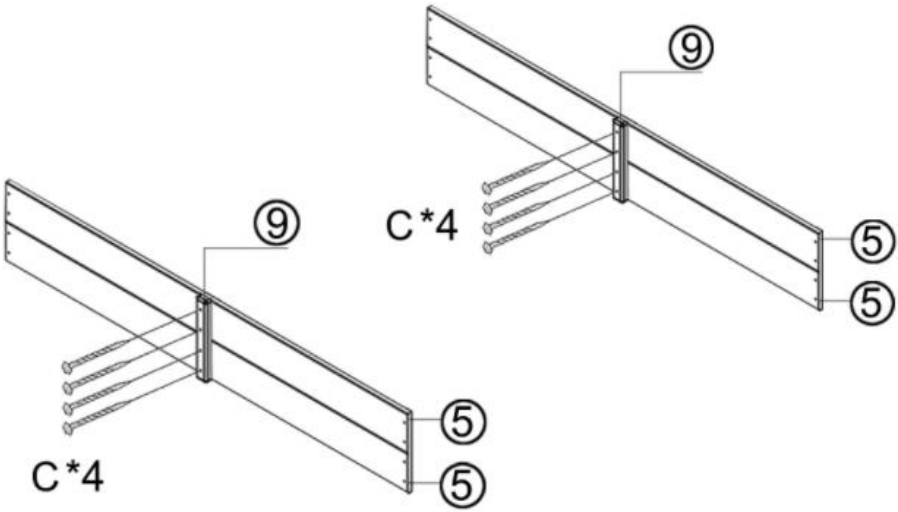

PASO 2: Empalme todos los paneles de brazolas con tornillos.

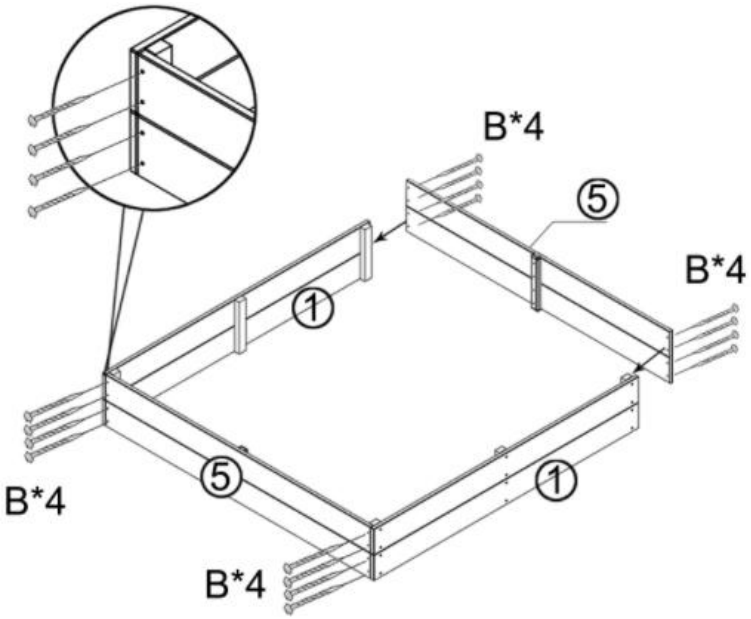

PASO 3: Montaje de las placas inferiores del asiento.

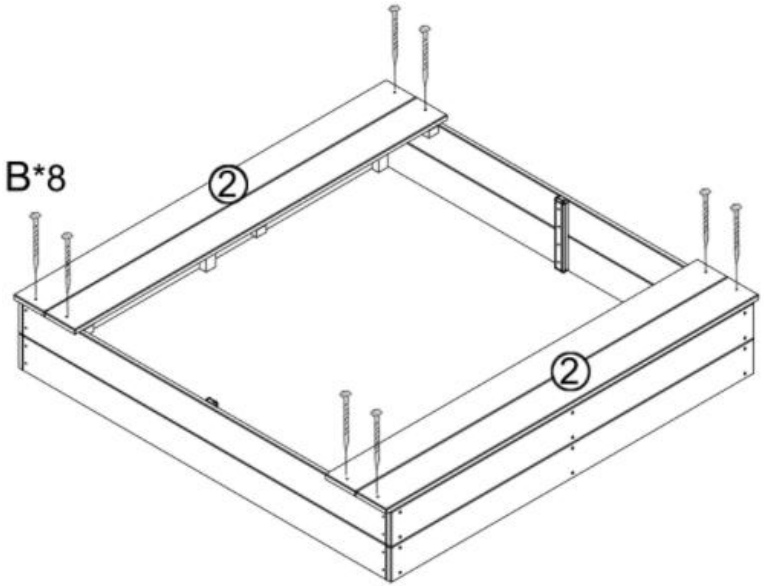

PASO 4: Montar los asientos.

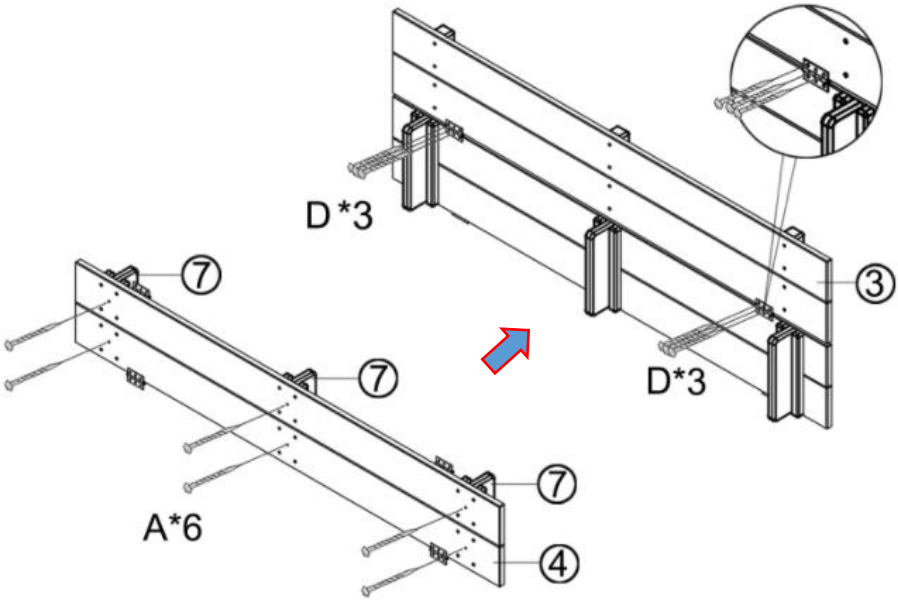

NOTA: Este paso debe repetirse dos veces.

PASO 5: Asegure las bisagras.

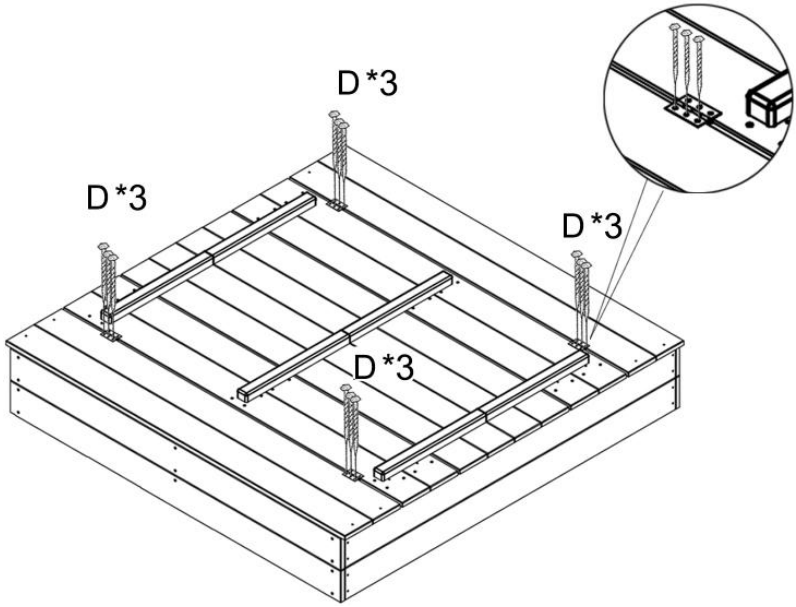

NOTA: El asiento se pliega y se convierte en una tapa cuando no está en

uso.

PASO 6: Instale el bloque de soporte del respaldo y mueva todo el producto sobre la tela inferior.

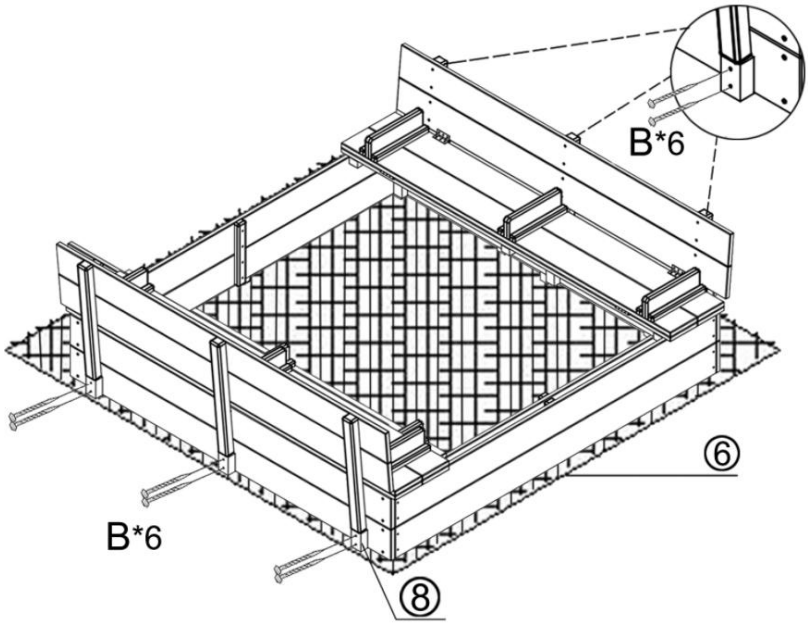

MAINTENANCE

15. Guardar alejado de la luz directa del sol .
16. Verifique la confiabilidad de las piezas antes de su uso.

Fabricante: JIANYANG LONGSHENG ARTS CO.,LTD
Dirección: BAIDIYUAN, CIUDAD DE JIANGKOU, JIANYANG, FUJIAN, CHINA
Importado a AUS: SIHAO PTY LTD. 1 ROKEVA STREET ASTWOOD NSW 2122 Australia
Importado a EE. UU.: Sanven Technology Ltd. Suite 250, 9166 Anaheim Place, Rancho Cucamonga, CA 91730

UK	REP

E-CrossStu GmbH

Mainzer Landstr.69, 60329 Frankfurt am Main.

EC	REP

YH CONSULTING LIMITED.

C/O YH Consulting Limited Office 147, Centurion House,

London Road, Staines-upon-Thames, Surrey, TW18 4AX

VEVOR®

TOUGH TOOLS, HALF PRICE

Técnico Certificado de soporte y garantía electrónica

www.vevor.com/support