VEVOR®

TOUGH TOOLS, HALF PRICE

Technical Support and E-Warranty Certificate www.vevor.com/support

SKID STEER ATTACHMENT

USER MANUAL

We continue to be committed to provide you tools with competitive price.
"Save Half", "Half Price" or any other similar expressions used by us only represents an estimate of savings you might benefit from buying certain tools with us compared to the major top brands and does not necessarily mean to cover all categories of tools offered by us. You are kindly reminded to verify carefully when you are placing an order with us if you are actually saving half in comparison with the top major brands.

VEVOR®

TOUGH TOOLS, HALF PRICE

SKID STEER ATTACHMENT

MODEL: ZZ00401

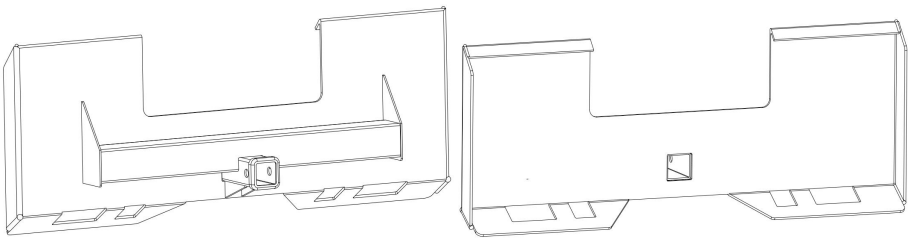

NEED HELP? CONTACT US!

Have product questions? Need technical support? Please feel free to contact us:

Technical Support and E-Warranty Certificate
www.vevor.com/support

This is the original instruction, please read all manual instructions carefully before operating. VEVOR reserves a clear interpretation of our user manual. The appearance of the product shall be subject to the product you received. Please forgive us that we won't inform you again if there are any technology or software updates on our product.

WARNING:

1. Do not allow children to climb on the unit.

2. Keep children and pets away during assembly.

ASSEMBLY PRECAUTIONS

1. Please assemble the product in strict accordance with the instructions. Incorrect assembly could be hazardous.

2. Please wear safety goggles and work gloves properly during assembly.

3. Do not try to assemble the product when feeling tired or when under the influence of alcohol, drugs or medication.

4. Separate and count all parts and hardware.

5. Two people are required for assembly.

8. Follow the intended uses only. Do not sit or stand on the above.

SAVE THESE INSTRUCTIONS

TECHNICAL PARAMETERS

MODEL	Material	L (mm)	H (mm)	W (mm)	Thickness (mm)
ZZ00401	50#	1160	458	235	6

PRODUCT INTRODUCE

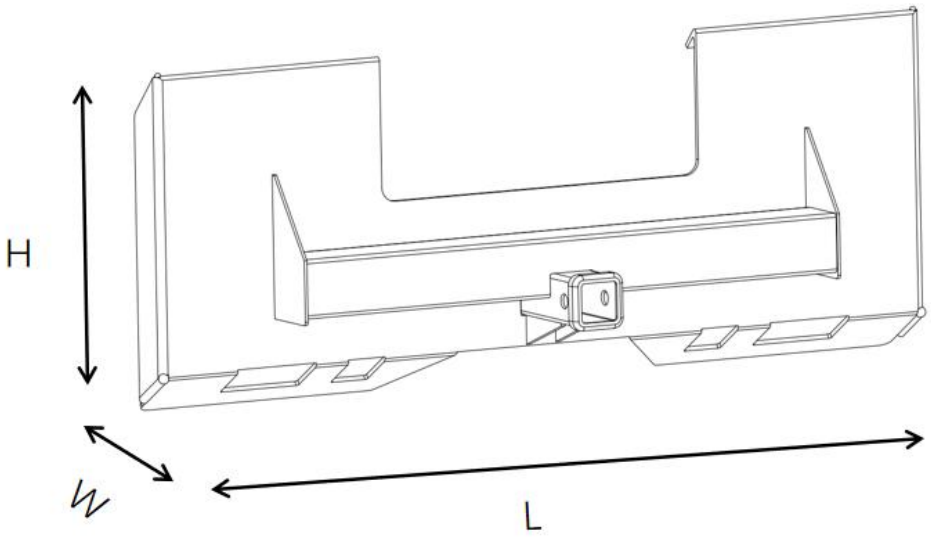

- Constructed from heavy-duty grade 50 structural steel.
- Integrated bending molding process, the thickness around is the same as the plate thickness, so the product bearing capacity is stronger, the product is more sturdy as the bending interface is full welding.
- Easy installation, quick installation and welding of accessories.
- With universal towing hook mounting port.

APPLICATIONS

The product can be attached directly to the vehicle before use, and then welded to other accessories such as plows, forks or haystack spears. Assist users to complete various farm work. When you're done, you can uninstall it.

The quick connection slip steering plate can be used with a variety of machines, such as loaders or tractors, to clear deep snow, remove farm waste or remove factory waste.

Several examples of application below:



Manufacturer: Shanghaimuxinmuyeyouxiangongsi
Address: Shuangchenglu 803nong11hao1602A-1609shi, baoshanqu, shanghai 200000 CN.
Imported to AUS: SIHAO PTY LTD. 1 ROKEVA STREETEASTWOOD NSW 2122 Australia
Imported to USA: Sanven Technology Ltd. Suite 250, 9166 Anaheim Place, Rancho Cucamonga, CA 91730

UK	REP

E-CrossStu GmbH
Mainzer Landstr.69, 60329 Frankfurt am Main.

EC	REP

YH CONSULTING LIMITED.
C/O YH Consulting Limited Office 147, Centurion House, London Road, Staines-upon-Thames, Surrey, TW18 4AX

VEVOR®

TOUGH TOOLS, HALF PRICE

Technical Support and E-Warranty Certificate

www.vevor.com/support

VEVOR®

TOUGH TOOLS, HALF PRICE

Técnico Soporte y certificado de garantía electrónica www.vevor.com/support

ACCESORIO DE DIRECCIÓN DESLIZANTE

MANUAL DE usuario

We continue to be committed to provide you tools with competitive price.
"Save Half", "Half Price" or any other similar expressions used by us only represents an estimate of savings you might benefit from buying certain tools with us compared to the major top brands and does not necessarily mean to cover all categories of tools offered by us. You are kindly reminded to verify carefully when you are placing an order with us if you are actually saving half in comparison with the top major brands.

VEVOR®

TOUGH TOOLS, HALF PRICE

SKID STEER ATTACHMENT

MODELO: ZZ0040 1

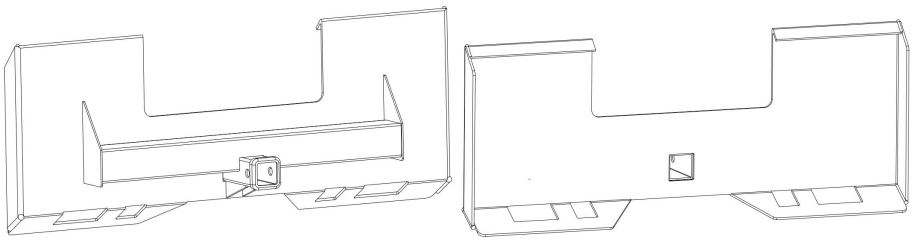

NEED HELP? CONTACT US!

Have product questions? Need technical support? Please feel free to contact us:

Technical Support and E-Warranty Certificate
www.vevor.com/support

This is the original instruction, please read all manual instructions carefully before operating. VEVOR reserves a clear interpretation of our user manual. The appearance of the product shall be subject to the product you received. Please forgive us that we won't inform you again if there are any technology or software updates on our product.

ADVERTENCIA:

2. No permita que los niños se suban a la unidad.

2. Mantenga alejados a los niños y las mascotas durante el montaje.

PRECAUCIONES DE MONTAJE

6. Monte el producto siguiendo estrictamente las instrucciones. Un montaje incorrecto podría ser peligroso.

7. Utilice gafas de seguridad y guantes de trabajo correctamente durante el montaje.

8. No intente montar el producto si se siente cansado o bajo la influencia del alcohol, drogas o medicamentos.

9. Separe y cuente todas las piezas y herrajes.

10. Para el montaje se necesitan dos personas.

8. Siga únicamente los usos previstos. No se siente ni se pare sobre lo anterior.

GUARDA ESTAS INSTRUCCIONES

TECHNICAL PARAMETERS

MODELO	Material	l (mm)	h (mm)	W. (mm)	Espesor (mm)
ZZ0040 1	50#	1160	458	235	6

PRODUCT INTRODUCE

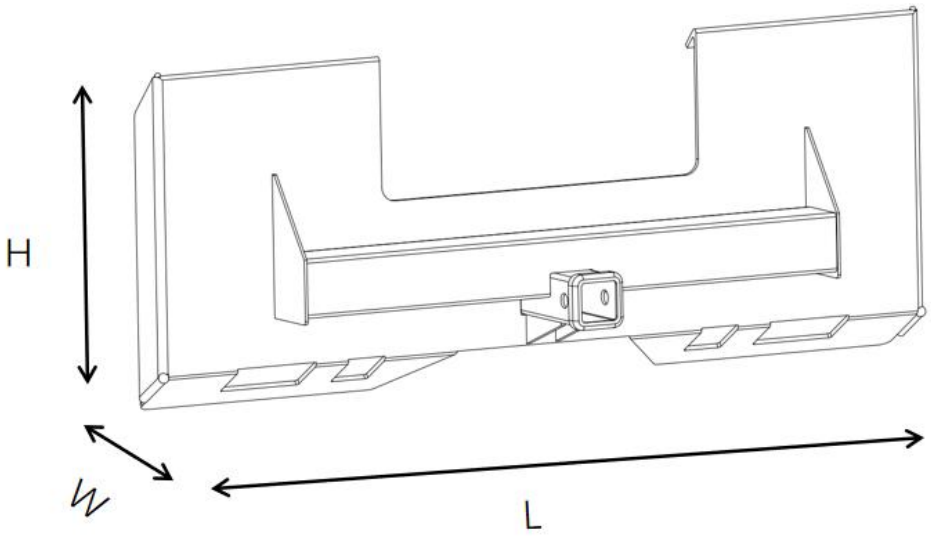

- Construido con acero estructural de grado 50 de alta resistencia .
- Proceso de moldeo por flexión integrado, el espesor alrededor es el mismo que el espesor de la placa, por lo que la capacidad de carga del producto es más fuerte, el producto es más resistente ya que la interfaz de flexión está completamente soldada .
- Fácil instalación, rápida instalación y soldadura de accesorios .
- Con puerto de montaje de gancho de remolque universal.

APPLICATIONS

El producto se puede conectar directamente al vehículo antes de su uso y luego soldarse a otros accesorios como arados, horquillas o lanzas para pajar. Ayuda a los usuarios a completar diversos trabajos agrícolas. Cuando haya terminado, puede desinstalarlo.

La placa de dirección deslizante de conexión rápida se puede utilizar con una variedad de máquinas, como cargadoras o tractores, para quitar nieve profunda, eliminar desechos agrícolas o eliminar desechos de fábrica.

Varios ejemplos de aplicación a continuación:



Fabricante : Shanghaimuxinmuyeyouxiangongsi
Dirección: Shuangchenglu 803nong11hao1602A-1609shi, baoshanqu, shanghai 200000 CN.
Importado a AUS: SIHAO PTY LTD.1 ROKEVA STREETEASTWOOD NSW 2122 Australia
Importado a EE. UU.: Sanven Technology Ltd. Suite 250, 9166 Anaheim Lugar, Rancho Cucamonga, CA 91730

UK	REP

E-CrossStu GmbH
Mainzer Landstr.69, 60329 Frankfurt am Main.

EC	REP

YH CONSULTING LIMITED.
C/O YH Consulting Limited Office 147, Centurion House, London Road, Staines-upon-Thames, Surrey, TW18 4AX

VEVOR®

TOUGH TOOLS, HALF PRICE

Técnico Certificado de soporte y garantía electrónica

www.vevor.com/support

VEVOR®

TOUGH TOOLS, HALF PRICE

Tecnico Supporto e certificato di garanzia elettronica www.vevor.com/support

ATTACCO PER MINIPALA

MANUALE D' uso

We continue to be committed to provide you tools with competitive price.
"Save Half", "Half Price" or any other similar expressions used by us only represents an estimate of savings you might benefit from buying certain tools with us compared to the major top brands and does not necessarily mean to cover all categories of tools offered by us. You are kindly reminded to verify carefully when you are placing an order with us if you are actually saving half in comparison with the top major brands.

VEVOR®

TOUGH TOOLS, HALF PRICE

SKID STEER ATTACHMENT

MODELLO: ZZ00401

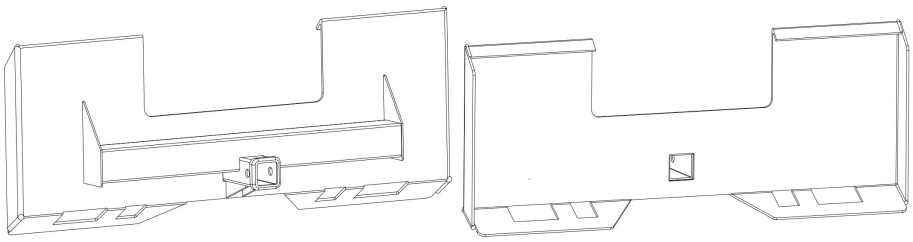

NEED HELP? CONTACT US!

Have product questions? Need technical support? Please feel free to contact us:

Technical Support and E-Warranty Certificate
www.vevor.com/support

This is the original instruction, please read all manual instructions carefully before operating. VEVOR reserves a clear interpretation of our user manual. The appearance of the product shall be subject to the product you received. Please forgive us that we won't inform you again if there are any technology or software updates on our product.

AVVERTIMENTO:

3. Non permettere ai bambini di salire sull'unità.

2. Tenere lontani i bambini e gli animali domestici durante il montaggio.

PRECAUZIONI DI MONTAGGIO

11. Si prega di assemblare il prodotto attenendosi scrupolosamente alle istruzioni. Un assemblaggio errato potrebbe essere pericoloso.

12. Si prega di indossare correttamente occhiali protettivi e guanti da lavoro durante il montaggio.

13. Non tentare di montare il prodotto quando ci si sente stanchi o sotto l'effetto di alcol, droghe o farmaci.

14. Separare e contare tutte le parti e l'hardware.

15. Per il montaggio sono necessarie due persone.

8. Seguire solo gli usi previsti. Non sedersi o stare in piedi su quanto sopra.

CONSERVA QUESTE ISTRUZIONI

TECHNICAL PARAMETERS

MODELLO	Materiale	l (mm)	H (mm)	W (mm)	Spessore (mm)
ZZ00401	50#	1160	458	235	6

PRODUCT INTRODUCE

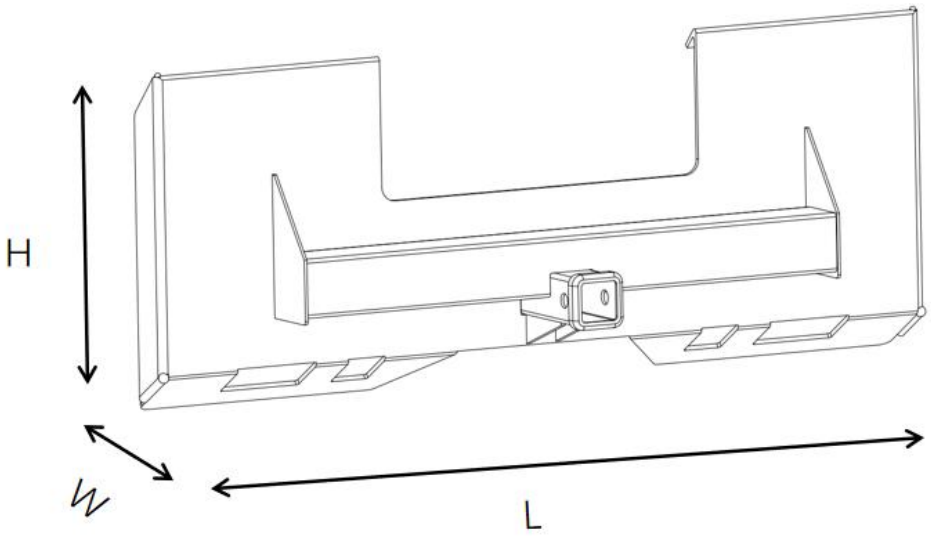

- Costruito in acciaio strutturale resistente di grado 50 .
- Processo di stampaggio di piegatura integrato, lo spessore intorno è uguale allo spessore della piastra, quindi la capacità portante del prodotto è maggiore, il prodotto è più robusto poiché l'interfaccia di piegatura è completamente saldata .
- Installazione semplice, installazione rapida e saldatura degli accessori .
- Con porta di montaggio universale per gancio di traino.

APPLICATIONS

Il prodotto può essere collegato direttamente al veicolo prima dell'uso e quindi saldato ad altri accessori come aratri, forche o lance per pagliai. Aiuta gli utenti a completare vari lavori agricoli. Al termine, è possibile disinstallarlo.

La piastra dello sterzo a scorrimento rapido può essere utilizzata con una varietà di macchine, come caricatori o trattori, per rimuovere la neve profonda, rimuovere i rifiuti agricoli o rimuovere i rifiuti di fabbrica.

Di seguito alcuni esempi di applicazione:



Produttore : Shanghaimuxinmuyeyouxiangongsi
Indirizzo: Shuangchenglu 803nong11hao1602A-1609shi, baoshanqu, shanghai 200000 CN.
Importato in Australia: SIHAO PTY LTD.1 ROKEVA STREETEASTWOOD NSW 2122 Australia
Importato negli Stati Uniti: Sanven Technology Ltd. Suite 250, 9166 Anaheim
Luogo, Rancho Cucamonga, CA 91730

UK	REP

E-CrossStu GmbH
Mainzer Landstr.69, 60329 Frankfurt am Main.

EC	REP

YH CONSULTING LIMITED.
C/O YH Consulting Limited Office 147, Centurion House, London Road, Staines-upon-Thames, Surrey, TW18 4AX

VEVOR®

TOUGH TOOLS, HALF PRICE

Tecnico Supporto e certificato di garanzia elettronica

www.vevor.com/support

VEVOR®

TOUGH TOOLS, HALF PRICE

Techniczny Certyfikat wsparcia i e-gwarancji www.vevor.com/support

ZAŁĄCZNIK DO MINIŁADOWARKI

INSTRUKCJA obsługi

We continue to be committed to provide you tools with competitive price.
"Save Half", "Half Price" or any other similar expressions used by us only represents an estimate of savings you might benefit from buying certain tools with us compared to the major top brands and does not necessarily mean to cover all categories of tools offered by us. You are kindly reminded to verify carefully when you are placing an order with us if you are actually saving half in comparison with the top major brands.

VEVOR®

TOUGH TOOLS, HALF PRICE

SKID STEER ATTACHMENT

MODEL: ZZ0040 1

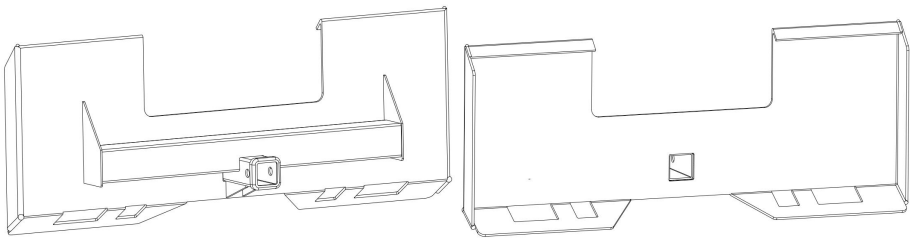

NEED HELP? CONTACT US!

Have product questions? Need technical support? Please feel free to contact us:

Technical Support and E-Warranty Certificate
www.vevor.com/support

This is the original instruction, please read all manual instructions carefully before operating. VEVOR reserves a clear interpretation of our user manual. The appearance of the product shall be subject to the product you received. Please forgive us that we won't inform you again if there are any technology or software updates on our product.

OSTRZEŻENIE:

4. Nie pozwalaj dzieciom wspinać się na urządzenie.

2. Podczas montażu trzymaj dzieci i zwierzęta z daleka.

ŚRODKI OSTROŻNOŚCI PRZY MONTAŻU

16. Prosimy o złożenie produktu ściśle według instrukcji. Nieprawidłowy montaż może być niebezpieczny.

17. Podczas montażu należy nosić okulary ochronne i rękawice robocze.

18. Nie należy podejmować prób montażu produktu będąc zmęczonym lub będąc pod wpływem alkoholu, narkotyków lub leków.

19. Oddziel i policz wszystkie części i osprzęt.

20. Do montażu potrzebne są dwie osoby.

8. Postępuj zgodnie z przeznaczeniem. Nie siadaj ani nie stawaj na powyższym.

ZACHOWAJ TE INSTRUKCJE

TECHNICAL PARAMETERS

MODEL	Materiał	L (mm)	H (mm)	W (mm)	Grubość (mm)
ZZ0040 1	50#	1160	458	235	6

PRODUCT INTRODUCE

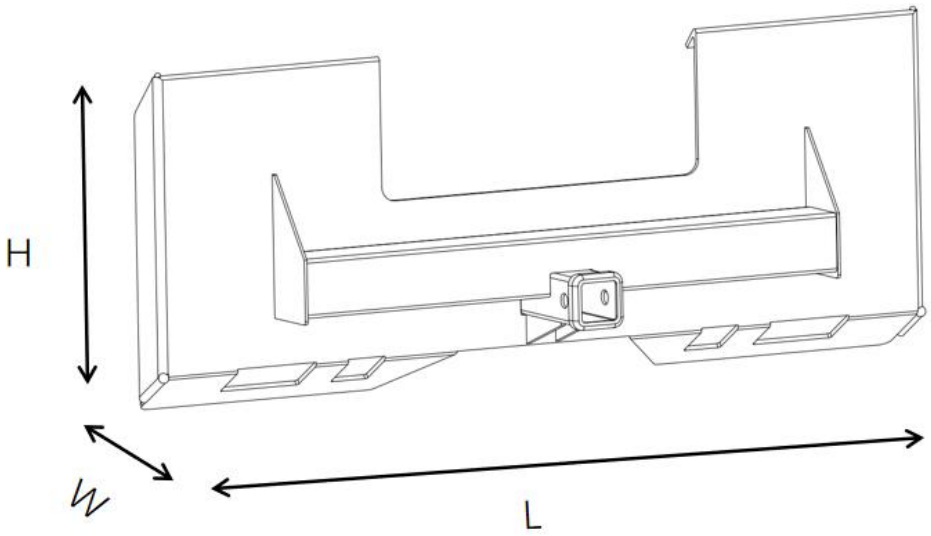

- Wykonany z wytrzymałej stali konstrukcyjnej klasy 50 .
- Zintegrowany proces formowania zginającego, grubość wokół jest taka sama jak grubość płyty, więc nośność produktu jest większa, produkt jest bardziej wytrzymały, ponieważ interfejs gięcia jest całkowicie spawany .
- Łatwy montaż, szybki montaż i spawanie akcesoriów .
- Z uniwersalnym otworem do montażu haka holowniczego.

APPLICATIONS

Produkt można przed użyciem przymocować bezpośrednio do pojazdu, a następnie przyspawać do innych akcesoriów takich jak pługi, widły czy włócznie do stogu siana. Pomagaj użytkownikom w wykonywaniu różnych prac rolniczych. Kiedy skończysz, możesz go odinstalować.

Płytkę kierowniczą szybkozłącza można stosować z różnymi maszynami, takimi jak ładowarki lub traktory, do odśnieżania głębokiego śniegu, usuwania odpadów rolniczych lub usuwania odpadów fabrycznych.

Poniżej kilka przykładów zastosowań:



Producent : Shanghaimuxinmuyeyouxiangongsi
Adres: Shuangchenglu 803nong11hao1602A-1609shi, baoshanqu, szanghaj 200000 CN.
Import do AUS: SIHAO PTY LTD. 1 ROKEVA STREETEASTWOOD NSW 2122 Australia
Import do USA: Sanven Technology Ltd. Suite 250, 9166 Anaheim Place, Rancho Cucamonga, Kalifornia 91730

UK	REP

E-CrossStu GmbH
Mainzer Landstr.69, 60329 Frankfurt am Main.

EC	REP

YH CONSULTING LIMITED.
C/O YH Consulting Limited Office 147, Centurion House, London Road, Staines-upon-Thames, Surrey, TW18 4AX

VEVOR®

TOUGH TOOLS, HALF PRICE

Techniczny Certyfikat wsparcia i e-gwarancji

www.vevor.com/support

VEVOR®

TOUGH TOOLS, HALF PRICE

Technique Assistance et certificat de garantie électronique

www.vevor.com/support

ATTACHEMENT DE CHARGEUSE COMPACTE

de L'UTILISATEUR

We continue to be committed to provide you tools with competitive price.
"Save Half", "Half Price" or any other similar expressions used by us only represents an estimate of savings you might benefit from buying certain tools with us compared to the major top brands and does not necessarily mean to cover all categories of tools offered by us. You are kindly reminded to verify carefully when you are placing an order with us if you are actually saving half in comparison with the top major brands.

VEVOR®

TOUGH TOOLS, HALF PRICE

SKID STEER ATTACHMENT

MODÈLE: ZZ0040 1

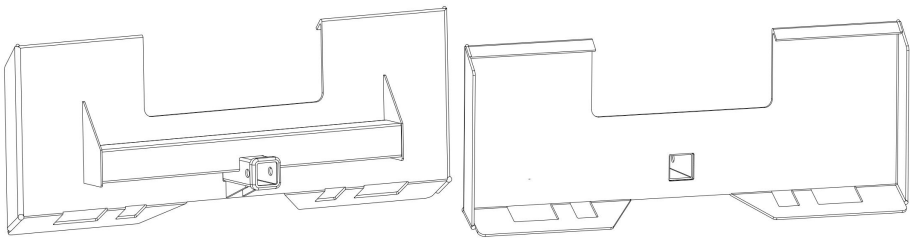

NEED HELP? CONTACT US!

Have product questions? Need technical support? Please feel free to contact us:

Technical Support and E-Warranty Certificate
www.vevor.com/support

This is the original instruction, please read all manual instructions carefully before operating. VEVOR reserves a clear interpretation of our user manual. The appearance of the product shall be subject to the product you received. Please forgive us that we won't inform you again if there are any technology or software updates on our product.

AVERTISSEMENT:

5. Ne laissez pas les enfants grimper sur l'appareil.

2. Éloignez les enfants et les animaux domestiques pendant l'assemblage.

PRÉCAUTIONS DE MONTAGE

21. Veuillez assembler le produit en stricte conformité avec les instructions. Un assemblage incorrect pourrait être dangereux.

22. Veuillez porter correctement des lunettes de sécurité et des gants de travail pendant l'assemblage.

23. N'essayez pas d'assembler le produit lorsque vous vous sentez fatigué ou sous l'influence de l'alcool, de drogues ou de médicaments.

24. Séparez et comptez toutes les pièces et le matériel.

25. Deux personnes sont nécessaires pour le montage.

8. Suivez uniquement les utilisations prévues. Ne vous asseyez pas et ne vous tenez pas debout sur ce qui précède.

CONSERVEZ CES INSTRUCTIONS

TECHNICAL PARAMETERS

MODÈLE	Matériel	L (mm)	H (mm)	W (mm)	Épaisseur (mm)
ZZ0040 1	50#	1160	458	235	6

PRODUCT INTRODUCE

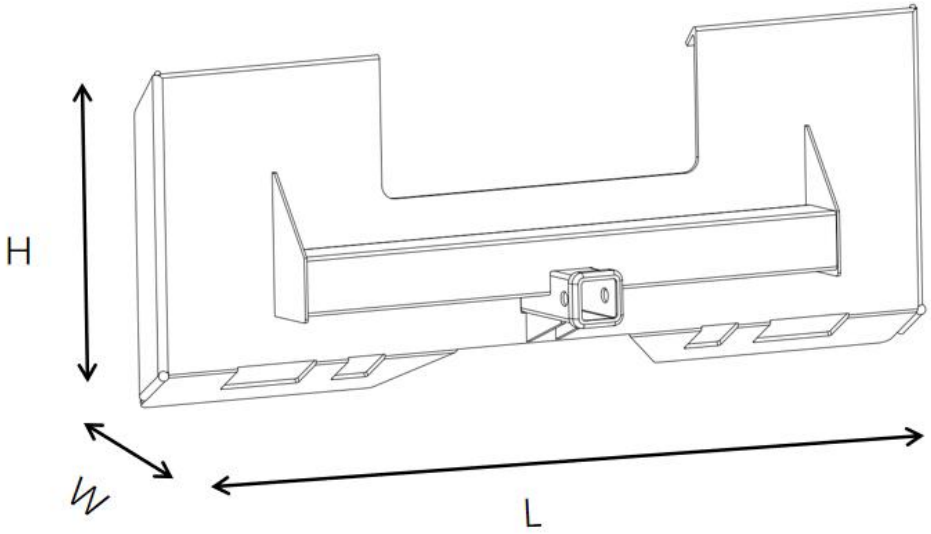

- Construit en acier de construction robuste de qualité 50 .
- Processus de moulage par pliage intégré, l'épaisseur autour est la même que l'épaisseur de la plaque, de sorte que la capacité portante du produit est plus forte, le produit est plus robuste car l'interface de pliage est entièrement soudée .
- Installation facile, installation et soudage rapides des accessoires .
- Avec port de montage universel pour crochet de remorquage.

APPLICATIONS

Le produit peut être fixé directement sur le véhicule avant utilisation, puis soudé à d'autres accessoires tels que des charrues, des fourches ou des lances à botte de foin. Aider les utilisateurs à effectuer divers travaux agricoles. Lorsque vous avez terminé, vous pouvez le désinstaller.

La plaque de direction à glissement à connexion rapide peut être utilisée avec une variété de machines, telles que des chargeurs ou des tracteurs, pour déneiger profondément, éliminer les déchets agricoles ou éliminer les déchets d'usine.

Plusieurs exemples d'application ci-dessous :



Fabricant : Shanghaimuxinmuyeyouxiangongsi
Adresse : Shuangchenglu 803nong11hao1602A-1609shi, baoshanqu, Shanghai 200000 CN.
Importé en Australie : SIHAO PTY LTD. 1 ROKEVA STREETASTWOOD NSW 2122 Australie
Importé aux États-Unis : Sanven Technology Ltd. Suite 250, 9166 Anaheim
Lieu, Rancho Cucamonga, CA 91730

UK	REP

E-CrossStu GmbH
Mainzer Landstr.69, 60329 Frankfurt am Main.

EC	REP

YH CONSULTING LIMITED.
C/O YH Consulting Limited Office 147, Centurion House, London Road, Staines-upon-Thames, Surrey, TW18 4AX

VEVOR®

TOUGH TOOLS, HALF PRICE

Technique Assistance et certificat de garantie électronique

www.vevor.com/support

VEVOR®

TOUGH TOOLS, HALF PRICE

Technisch Ondersteuning en e-garantiecertificaat www.vevor.com/support

SCHRANKLADERBEVESTIGING

Handleiding

We continue to be committed to provide you tools with competitive price.
"Save Half", "Half Price" or any other similar expressions used by us only represents an estimate of savings you might benefit from buying certain tools with us compared to the major top brands and does not necessarily mean to cover all categories of tools offered by us. You are kindly reminded to verify carefully when you are placing an order with us if you are actually saving half in comparison with the top major brands.

VEVOR®

TOUGH TOOLS, HALF PRICE

SKID STEER ATTACHMENT

MODEL: ZZ0040 1

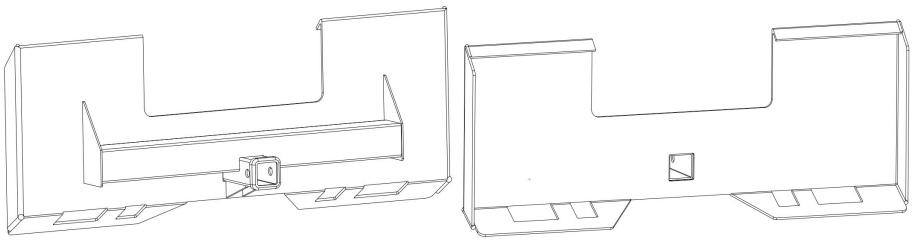

NEED HELP? CONTACT US!

Have product questions? Need technical support? Please feel free to contact us:

Technical Support and E-Warranty Certificate
www.vevor.com/support

This is the original instruction, please read all manual instructions carefully before operating. VEVOR reserves a clear interpretation of our user manual. The appearance of the product shall be subject to the product you received. Please forgive us that we won't inform you again if there are any technology or software updates on our product.

WAARSCHUWING:

6. Laat kinderen niet op het apparaat klimmen.

2. Houd kinderen en huisdieren tijdens de montage uit de buurt.

MONTAGEVOORZORGSMAATREGELEN

26. Monteer het product strikt volgens de instructies. Een onjuiste montage kan gevaarlijk zijn.

27. Draag tijdens de montage een veiligheidsbril en werkhandschoenen.

28. Probeer het product niet in elkaar te zetten als u zich moe voelt of onder invloed bent van alcohol, drugs of medicijnen.

29. Scheid en tel alle onderdelen en hardware.

30. Voor de montage zijn twee personen nodig.

8. Volg uitsluitend het beoogde gebruik. Ga niet op het bovenstaande zitten of staan.

BEWAAR DEZE INSTRUCTIES

TECHNICAL PARAMETERS

MODEL	Materiaal	L (mm)	H (mm)	W (mm)	Dikte (mm)
ZZ0040 1	50#	1160	458	235	6

PRODUCT INTRODUCE

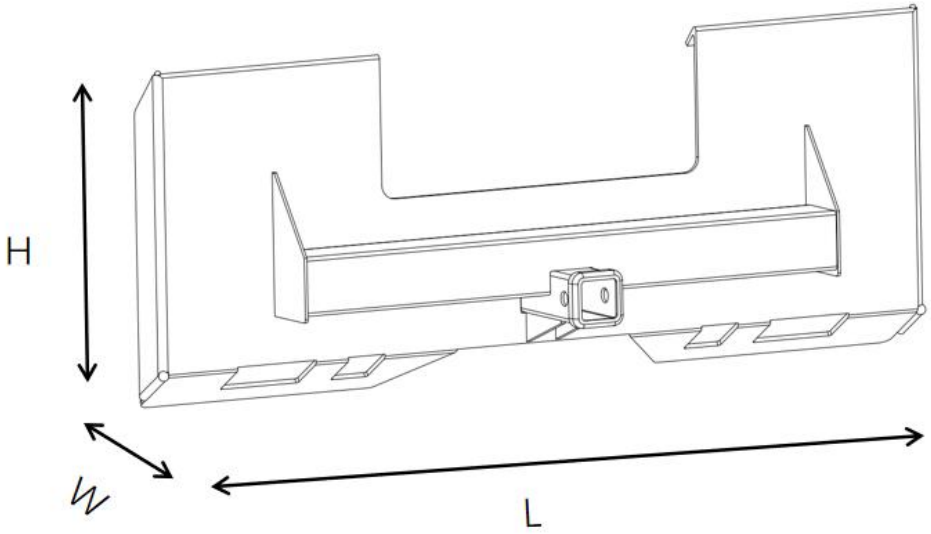

- Gemaakt van robuust constructiestaal klasse 50 .
- Geïntegreerd buigvormproces, de dikte rondom is hetzelfde als de plaatdikte, dus het draagvermogen van het product is sterker, het product is steviger omdat de buiginterface volledig is gelast .
- Eenvoudige installatie, snelle installatie en lassen van accessoires .
- Met universele trekhaakbevestigingspoort.

APPLICATIONS

Het product kan vóór gebruik rechtstreeks aan het voertuig worden bevestigd en vervolgens aan andere accessoires worden gelast, zoals ploegen, vorken of hooibergsperen. Help gebruikers bij het voltooien van verschillende landbouwwerkzaamheden. Als u klaar bent, kunt u het verwijderen.

De slipstuurplaat met snelle verbinding kan worden gebruikt met een verscheidenheid aan machines, zoals laders of tractoren, om diepe sneeuw te ruimen, landbouwafval te verwijderen of fabrieksafval te verwijderen.

Hieronder enkele toepassingsvoorbeelden:



Fabrikant : Shanghaimuxinmuyeyouxiangongsi
Adres: Shuangchenglu 803nong11hao1602A-1609shi, baoshanqu, shanghai 200000 CN.
Geïmporteerd naar AUS: SIHAO PTY LTD. 1 ROKEVA STREETEASTWOOD NSW 2122 Australië
Geïmporteerd in de VS: Sanven Technology Ltd. Suite 250, 9166 Anaheim
Plaats, Rancho Cucamonga, CA 91730

UK	REP

E-CrossStu GmbH
Mainzer Landstr.69, 60329 Frankfurt am Main.

EC	REP

YH CONSULTING LIMITED.
C/O YH Consulting Limited Office 147, Centurion House, London Road, Staines-upon-Thames, Surrey, TW18 4AX

VEVOR®

TOUGH TOOLS, HALF PRICE

Technisch Ondersteuning en e-garantiecertificaat

www.vevor.com/support

VEVOR®

TOUGH TOOLS, HALF PRICE

Teknisk Support och e-garanticertifikat www.vevor.com/support

SKID STEER-TILLBEHÖR

Användarmanual

We continue to be committed to provide you tools with competitive price.
"Save Half", "Half Price" or any other similar expressions used by us only represents an estimate of savings you might benefit from buying certain tools with us compared to the major top brands and does not necessarily mean to cover all categories of tools offered by us. You are kindly reminded to verify carefully when you are placing an order with us if you are actually saving half in comparison with the top major brands.

VEVOR®

TOUGH TOOLS, HALF PRICE

SKID STEER ATTACHMENT

MODELL: ZZ0040 1

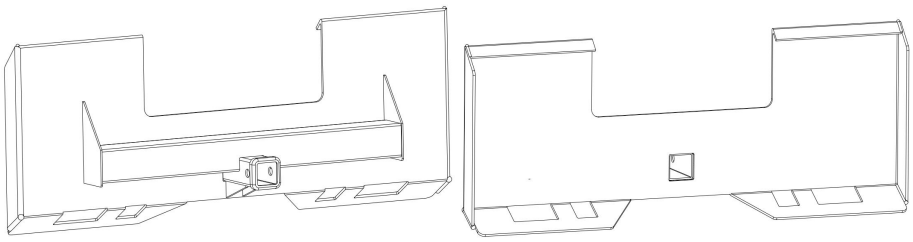

NEED HELP? CONTACT US!

Have product questions? Need technical support? Please feel free to contact us:

Technical Support and E-Warranty Certificate
www.vevor.com/support

This is the original instruction, please read all manual instructions carefully before operating. VEVOR reserves a clear interpretation of our user manual. The appearance of the product shall be subject to the product you received. Please forgive us that we won't inform you again if there are any technology or software updates on our product.

VARNING:

7. Låt inte barn klättra på enheten.

2. Håll barn och husdjur borta under monteringen.

FÖRSIKTIGHETSÅTGÄRDER FÖR MONTERING

31. Vänligen montera produkten i strikt enlighet med instruktionerna. Felaktig montering kan vara farligt.

32. Vänligen använd skyddsglasögon och arbetshandskar ordentligt under monteringen.

33. Försök inte att montera produkten när du känner dig trött eller när du är påverkad av alkohol, droger eller medicin.

34. Separera och räkna alla delar och hårdvara.

35. Två personer krävs för montering.

8. Följ endast avsedd användning. Sitt eller stå inte på ovanstående.

SPARA DESSA INSTRUKTIONER

TECHNICAL PARAMETERS

MODELL	Material	L (mm)	H (mm)	W (mm)	Tjocklek (mm)
ZZ0040 1	50#	1160	458	235	6

PRODUCT INTRODUCE

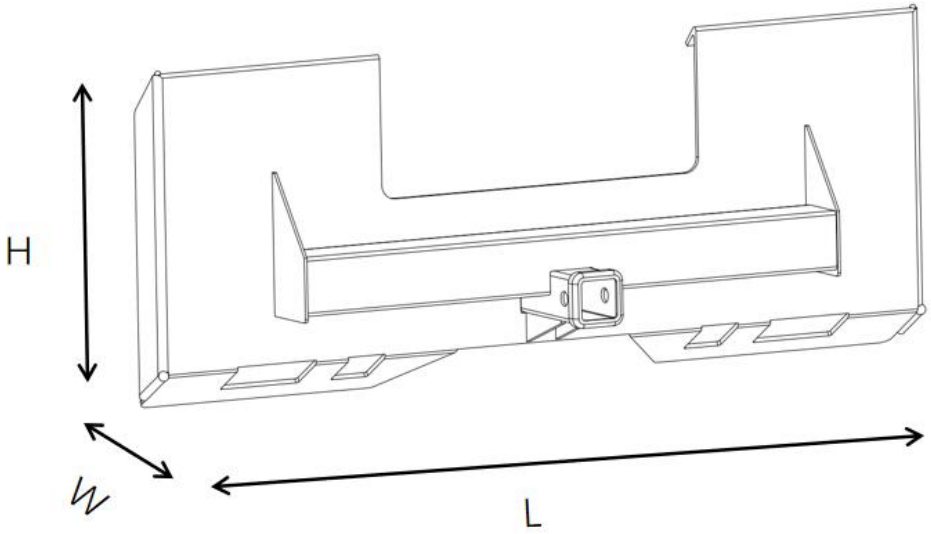

- Tillverkad av kraftigt 50 konstruktionsstål .
- Integrerad böjgjutningsprocess, tjockleken runt är densamma som plåttjockleken, så produktens bärförmåga är starkare, produkten är mer hållbar eftersom böjningsgränssnittet är helsvetsad .
- Enkel installation, snabb installation och svetsning av tillbehör .
- Med universal dragkrok monteringsport.

APPLICATIONS

Produkten kan fästas direkt på fordonet före användning och sedan svetsas till andra tillbehör som plogar, gafflar eller höstacksspjut. Hjälp användare att utföra olika lantbruksarbeten. När du är klar kan du avinstallera den.

Snabbkopplingssläpstyrplattan kan användas med en mängd olika maskiner, såsom lastare eller traktorer, för att röja djup snö, ta bort gårdsavfall eller ta bort fabriksavfall.

Flera exempel på tillämpningar nedan:



Tillverkare : Shanghaimuxinmuyeyouxiangongsi
Adress: Shuangchenglu 803nong11hao1602A-1609shi, baoshanqu, shanghai 200000 CN.
Importerad till AUS: SIHAO PTY LTD. 1 ROKEVA STREETEASTWOOD NSW 2122 Australien
Importerad till USA: Sanven Technology Ltd. Suite 250, 9166 Anaheim Place, Rancho Cucamonga, CA 91730

UK	REP

E-CrossStu GmbH
Mainzer Landstr.69, 60329 Frankfurt am Main.

EC	REP

YH CONSULTING LIMITED.
C/O YH Consulting Limited Office 147, Centurion House, London Road, Staines-upon-Thames, Surrey, TW18 4AX

VEVOR®

TOUGH TOOLS, HALF PRICE

Teknisk Support och e-garanticertifikat

www.vevor.com/support

VEVOR®

TOUGH TOOLS, HALF PRICE

Technisch Support- und E-Garantie-Zertifikat www.vevor.com/support

KOMPAKTLADER-ANBAUGERÄT

Benutzerhandbuch

We continue to be committed to provide you tools with competitive price.
"Save Half", "Half Price" or any other similar expressions used by us only represents an estimate of savings you might benefit from buying certain tools with us compared to the major top brands and does not necessarily mean to cover all categories of tools offered by us. You are kindly reminded to verify carefully when you are placing an order with us if you are actually saving half in comparison with the top major brands.

VEVOR®

TOUGH TOOLS, HALF PRICE

SKID STEER ATTACHMENT

MODELL: ZZ0040 1

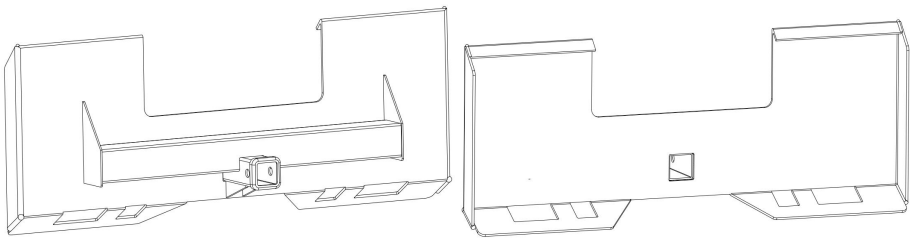

NEED HELP? CONTACT US!

Have product questions? Need technical support? Please feel free to contact us:

Technical Support and E-Warranty Certificate
www.vevor.com/support

This is the original instruction, please read all manual instructions carefully before operating. VEVOR reserves a clear interpretation of our user manual. The appearance of the product shall be subject to the product you received. Please forgive us that we won't inform you again if there are any technology or software updates on our product.

WARNUNG:

8. Erlauben Sie Kindern nicht, auf das Gerät zu klettern.

2. Halten Sie Kinder und Haustiere während der Montage fern.

VORSICHTSMASSNAHMEN BEI DER MONTAGE

36. Bitte bauen Sie das Produkt unter strikter Einhaltung der Anweisungen zusammen. Eine falsche Montage kann gefährlich sein.

37. Bitte tragen Sie bei der Montage ordnungsgemäß eine Schutzbrille und Arbeitshandschuhe.

38. Versuchen Sie nicht, das Produkt zusammenzubauen, wenn Sie sich müde fühlen oder unter dem Einfluss von Alkohol, Drogen oder Medikamenten stehen.

39. Trennen und zählen Sie alle Teile und Hardware.

40. Für den Aufbau sind zwei Personen erforderlich.

8. Befolgen Sie nur die vorgesehenen Verwendungszwecke. Setzen oder stehen Sie nicht darauf.

ANLEITUNG AUFBEWAHREN

TECHNICAL PARAMETERS

MODELL	Material	L (mm)	H (mm)	W (mm)	Dicke (mm)
ZZ0040 1	50#	1160	458	235	6

PRODUCT INTRODUCE

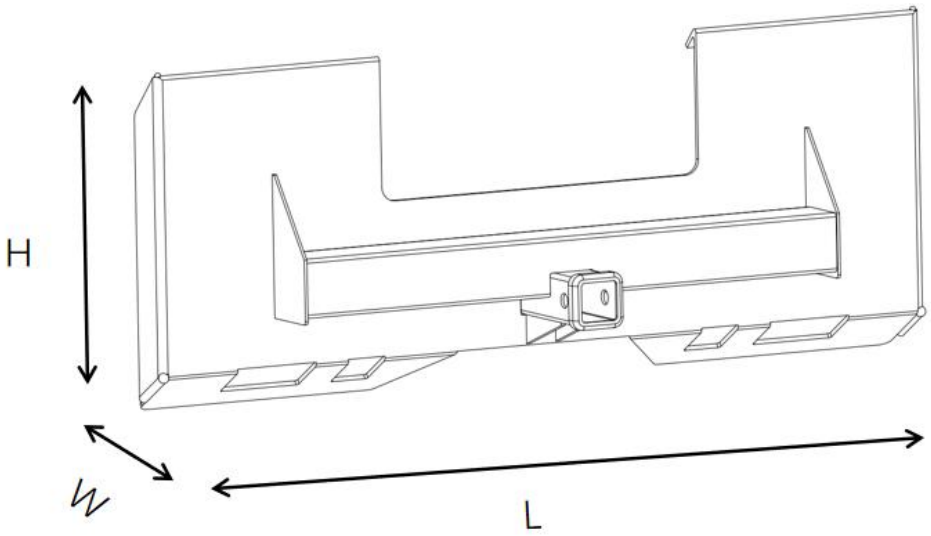

- Hergestellt aus hochbelastbarem Baustahl der Güteklasse 50 .
- Integrierter Biegeformprozess, die Dicke entspricht der Plattendicke, sodass die Tragfähigkeit des Produkts höher ist und das Produkt stabiler ist, da die Biegeschnittstelle vollständig verschweißt ist .
- Einfache Installation, schnelle Installation und Schweißen von Zubehör .
- Mit universeller Anhängerkupplungs-Montageöffnung.

APPLICATIONS

Das Produkt kann vor dem Einsatz direkt am Fahrzeug befestigt und dann mit anderem Zubehör wie Pflügen, Gabeln oder Heuhaufenspießen verschweißt werden. Unterstützen Sie Benutzer bei der Erledigung verschiedener landwirtschaftlicher Arbeiten. Wenn Sie fertig sind, können Sie es deinstallieren.

Die Schnellkupplungs-Lenkplatte kann mit einer Vielzahl von Maschinen wie Ladern oder Traktoren verwendet werden, um tiefen Schnee zu räumen, landwirtschaftliche Abfälle zu entfernen oder Fabrikabfälle zu entfernen.

Nachfolgend einige Anwendungsbeispiele:



Hersteller : Shanghaimuxinmuyeyouxiangongsi
Adresse: Shuangchenglu 803nong11hao1602A-1609shi, baoshanqu, Shanghai 200000 CN.
Importiert nach AUS: SIHAO PTY LTD. 1 ROKEVA STREETEASTWOOD NSW 2122 Australien
In die USA importiert: Sanven Technology Ltd. Suite 250, 9166 Anaheim Place, Rancho Cucamonga, CA 91730

UK	REP

E-CrossStu GmbH
Mainzer Landstr.69, 60329 Frankfurt am Main.

EC	REP

YH CONSULTING LIMITED.
C/O YH Consulting Limited Office 147, Centurion House, London Road, Staines-upon-Thames, Surrey, TW18 4AX

VEVOR®

TOUGH TOOLS, HALF PRICE

Technisch Support- und E-Garantiezertifikat

www.vevor.com/support