VEVOR®

TOUGH TOOLS, HALF PRICE

Technical Support and E-Warranty Certificate www.vevor.com/support

ACTIVE SEATING

USER MANUAL

MODEL NO.: Allen570

We continue to be committed to provide you tools with competitive price.
"Save Half", "Half Price" or any other similar expressions used by us only represents an estimate of savings you might benefit from buying certain tools with us compared to the major top brands and does not necessarily mean to cover all categories of tools offered by us. You are kindly reminded to verify carefully when you are placing an order with us if you are actually saving half in comparison with the top major brands.

VEVOR®

TOUGH TOOLS, HALF PRICE

Active Seating

MODEL NO.: Allen570

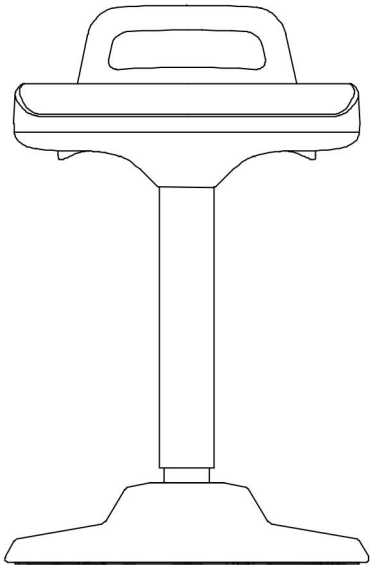

NEED HELP? CONTACT US!

Have product questions? Need technical support? Please feel free to contact us:

Technical Support and E-Warranty Certificate
www.vevor.com/support

This is the original instruction, please read all manual instructions carefully before operating. VEVOR reserves a clear interpretation of our user manual. The appearance of the product shall be subject to the product you received. Please forgive us that we won't inform you again if there are any technology or software updates on our product.

⚠ **WARNING:**

Please read this manual carefully before using the product. Failure to do so may result in serious injury.

ASSEMBLY PRECAUTIONS

1. Assemble only according to these instructions. Improper assembly can create hazards.

2. Wear ANSI-approved safety goggles and heavy-duty work gloves during assembly.

3. Keep the assembly area clean and well-lit.

4. Keep bystanders out of the area during assembly.

5. Do not assemble when tired or when under the influence of alcohol, drugs or medication.

6. The product capabilities apply to properly and completely assembled products only.

7. Assemble on a flat, level, hard and smooth surface capable of safely supporting the Active Seating.

8. For additional information regarding the parts listed in the following pages, please refer to the Assembly Diagram of this manual. Unwrap and separate all parts in a clean work area.

SAVE THESE INSTRUCTIONS

USE PRECAUTIONS

TO PREVENT SERIOUS INJURY AND DEATH FROM TIPPING:

1. This product is not a toy Do not allow children to play with or near this item.

2. Do not exceed weight capacities, before moving.

3. Use only on a flat, level, hard and smooth surface capable of safely supporting a fully loaded Active Seating.

4. Use as intended only.
Inspect before every use; do not use if parts are loose or damaged.

TECHNICAL SPECIFICATIONS

Model	Allen570
Product Dimensions (LxWxH)(mm)	470*380*（625-875）
Packing Size(LxWxH)(mm)	500*210*420
Net Weight(kg)	About 6.5
Gross Weight(kg)	About 4.7

*Products such as specifications, appearance, and design are subject to modification without prior notice.

PACKAGE CONTENTS

A	1PC
B	1PC
C	1PC
D	1PC
E	1PC
F	4PC
G	1PC

ASSEMBLY STEPS

STEP1	STEP2
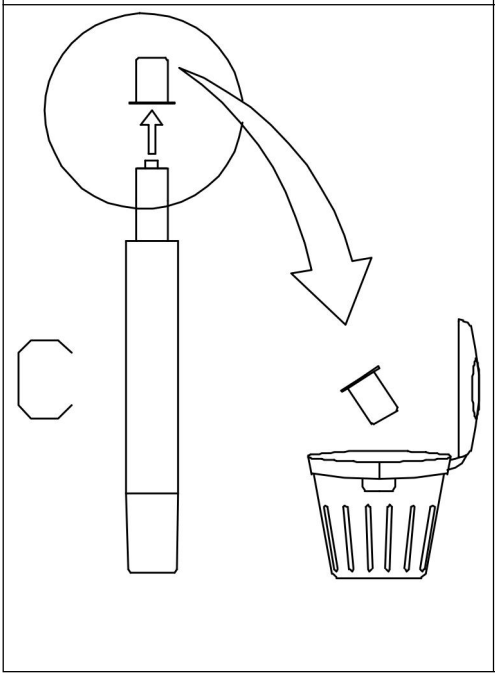	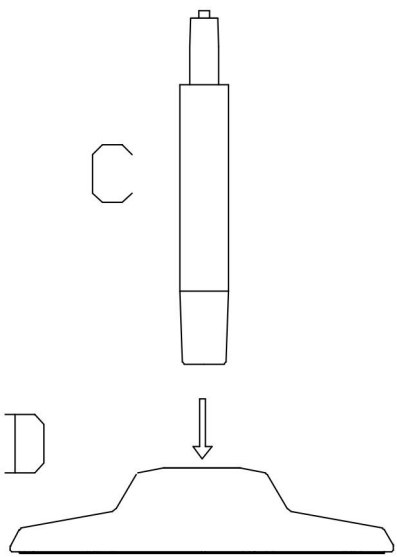

STEP3	STEP4
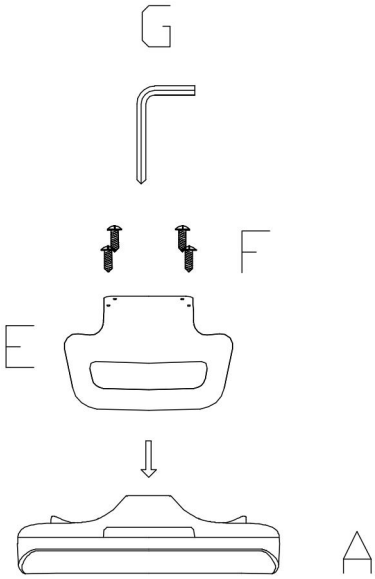	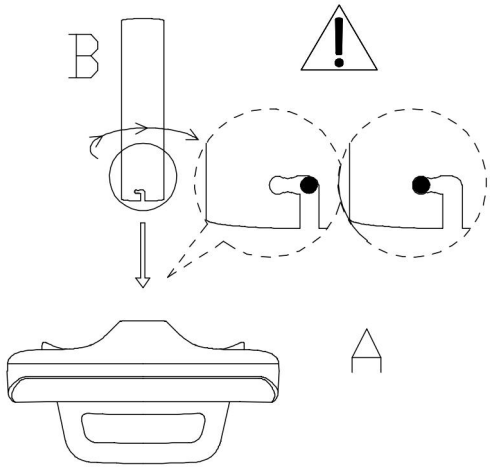

STEP5

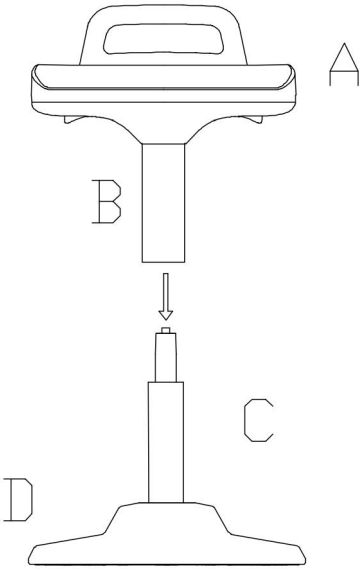

USER INSTRUCTIONS

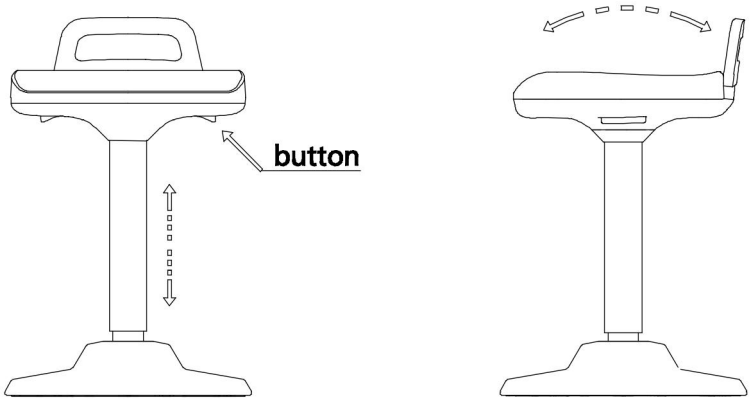

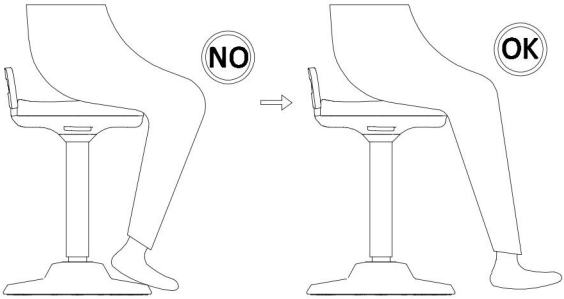

Warning: DO NOT LEAN BACKWARD! Do not tilt the wobble stool violently beyond the vertical position to minimize the risk of falling.

Warning: Do not use the stool with only one foot or without any feet on the ground.

COMPLETION

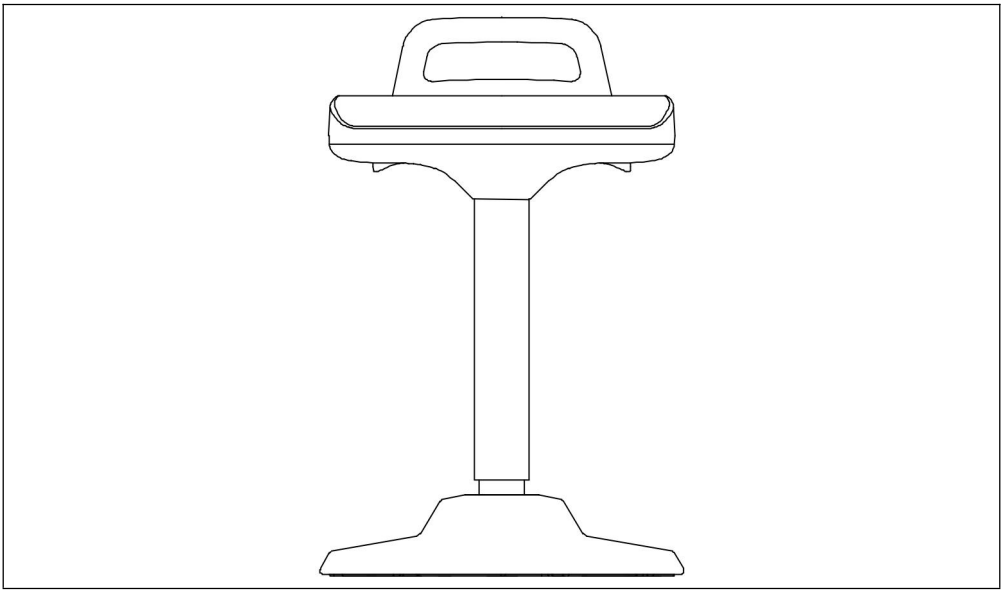

Manufacturer: Shanghaimuxinmuyeyouxiangongsi
Address: Shuangchenglu 803nong11hao1602A-1609shi, baoshanqu, shanghai 200000 CN.
Imported to AUS: SIHAO PTY LTD. 1 ROKEVA STREETEASTWOOD NSW 2122 Australia
Imported to USA: Sanven Technology Ltd. Suite 250, 9166 Anaheim Place, Rancho Cucamonga, CA 91730

EC	REP

E-CrossStu GmbH
Mainzer Landstr.69, 60329 Frankfurt am Main.

UK	REP

YH CONSULTING LIMITED.
C/O YH Consulting Limited Office 147, Centurion House, London Road, Staines-upon-Thames, Surrey, TW18 4AX

VEVOR®

TOUGH TOOLS, HALF PRICE

Technical Support and E-Warranty Certificate

www.vevor.com/support

VEVOR®

TOUGH TOOLS, HALF PRICE

Technique Assistance et certificat de garantie électronique

www.vevor.com/support

SIÈGES ACTIFS

MANUEL DE L' UTILISATEUR

N° DE MODÈLE : Allen570

We continue to be committed to provide you tools with competitive price.
"Save Half", "Half Price" or any other similar expressions used by us only represents an estimate of savings you might benefit from buying certain tools with us compared to the major top brands and does not necessarily mean to cover all categories of tools offered by us. You are kindly reminded to verify carefully when you are placing an order with us if you are actually saving half in comparison with the top major brands.

VEVOR®

TOUGH TOOLS, HALF PRICE

Active Seating

N° DE MODÈLE : Allen570

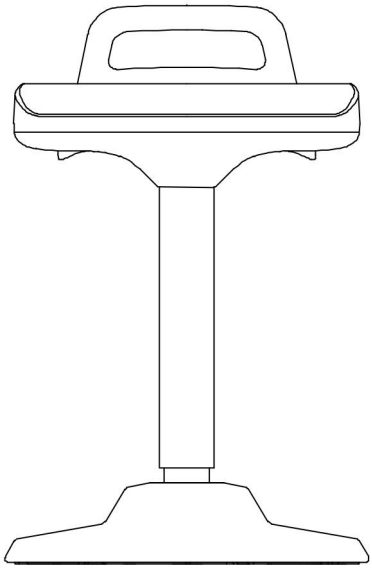

NEED HELP? CONTACT US!

Have product questions? Need technical support? Please feel free to contact us:

Technical Support and E-Warranty Certificate
www.vevor.com/support

This is the original instruction, please read all manual instructions carefully before operating. VEVOR reserves a clear interpretation of our user manual. The appearance of the product shall be subject to the product you received. Please forgive us that we won't inform you again if there are any technology or software updates on our product.

⚠ **AVERTISSEMENT:**

Veuillez lire attentivement ce manuel avant d'utiliser le produit. Ne pas le faire pourrait entraîner des blessures graves.

PRÉCAUTIONS DE MONTAGE

9. Assemblez uniquement selon ces instructions. Un assemblage incorrect peut créer des dangers.

10. Portez des lunettes de sécurité approuvées par l'ANSI et des gants de travail robustes pendant l'assemblage.

11. Gardez la zone de rassemblement propre et bien éclairée.

12. Gardez les spectateurs hors de la zone pendant l’assemblage.

13. Ne vous rassemblez pas lorsque vous êtes fatigué ou sous l’influence de l’alcool, de drogues ou de médicaments.

14. Les capacités du produit s'appliquent uniquement aux produits correctement et complètement assemblés.

15. Assemblez-le sur une surface plane, de niveau, dure et lisse, capable de soutenir en toute sécurité le siège actif.

16. Pour plus d'informations concernant les pièces répertoriées dans les pages suivantes, veuillez vous référer au schéma d'assemblage de ce manuel. Déballez et séparez toutes les pièces dans une zone de travail propre.

CONSERVEZ CES INSTRUCTIONS

PRÉCAUTIONS D'UTILISATION

POUR ÉVITER DES BLESSURES GRAVES ET LA MORT PAR BASCULEMENT :

5. Ce produit n'est pas un jouet. Ne laissez pas les enfants jouer avec ou à proximité de cet article.

6. Ne dépassez pas les capacités de poids avant de vous déplacer.

7. Utiliser uniquement sur une surface plane, de niveau, dure et lisse, capable de supporter en toute sécurité un siège actif entièrement chargé.

8. Utiliser uniquement comme prévu.
Inspectez avant chaque utilisation ; ne pas utiliser si les pièces sont desserrées ou endommagées.

TECHNICAL SPECIFICATIONS

Modèle	Allen570
dimensions du produit (LxlxH)(mm)	470*380*(625-875)
Taille de l'emballage (LxlxH)(mm)	500*210*420
Poids net / kg)	Environ 6,5
Poids brut (kg)	Environ 4,7

*Les produits tels que les spécifications, l'apparence et la conception sont sujets à modification sans préavis.

PACKAGE CONTENTS

A	1PC
B	1PC
C	1PC
D	1PC
E	1PC
F	4PC
G	1PC

ASSEMBLY STEPS

ÉTAPE 1	ÉTAPE 2

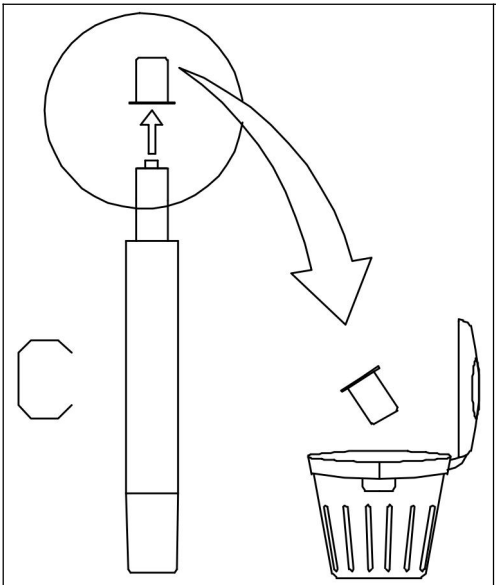

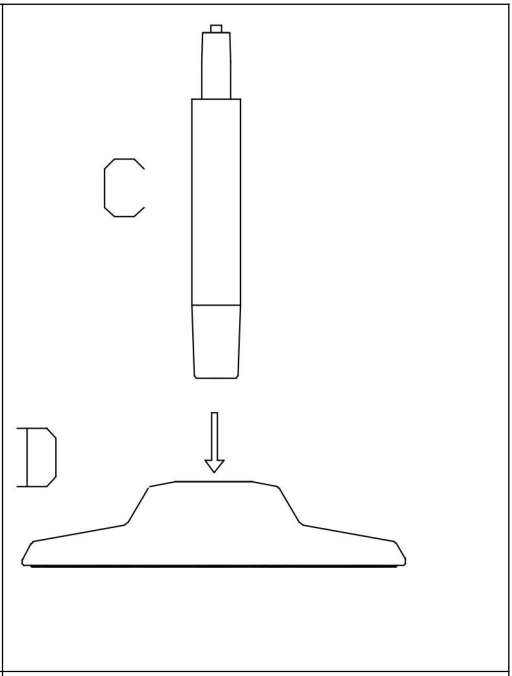

ÉTAPE 3

ÉTAPE 4

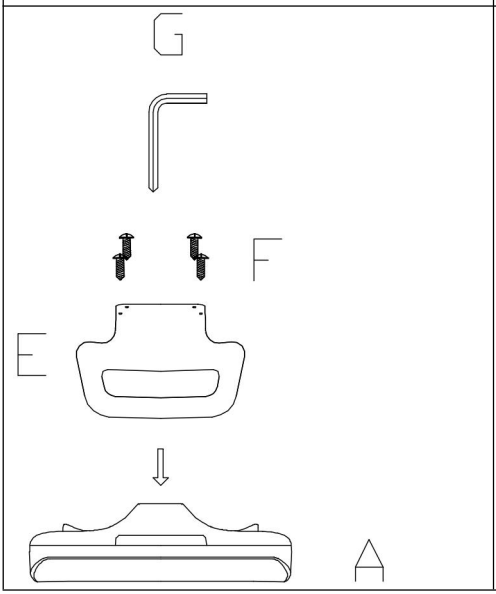

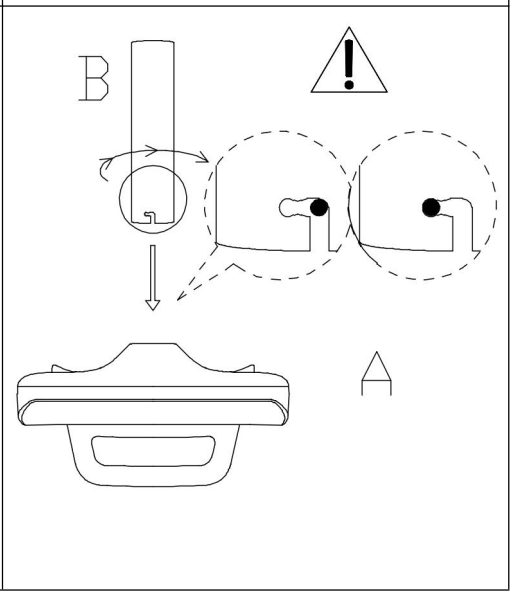

ÉTAPE5

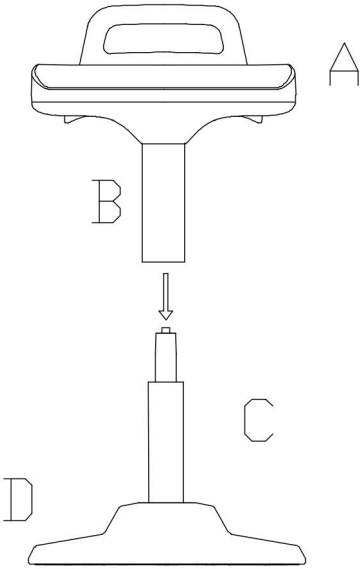

USER INSTRUCTIONS

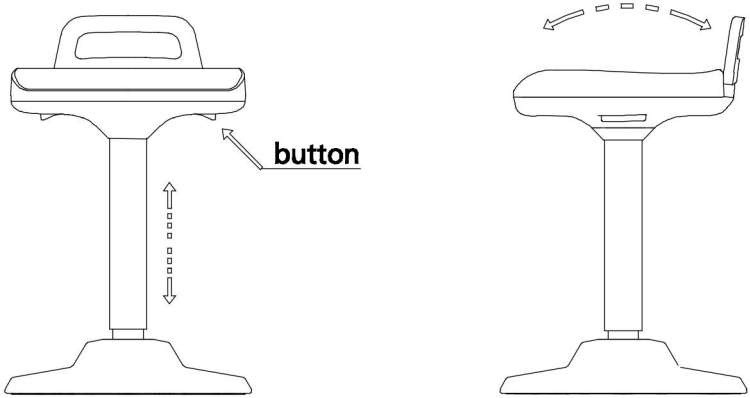

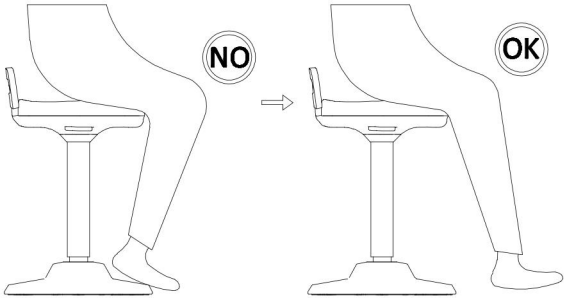

Attention : NE VOUS PENCHEZ PAS EN ARRIÈRE ! N'inclinez pas violemment le tabouret oscillant au-delà de la position verticale pour minimiser le risque de chute.

Attention : N'utilisez pas le tabouret avec un seul pied ou sans aucun pied au sol.

COMPLETION

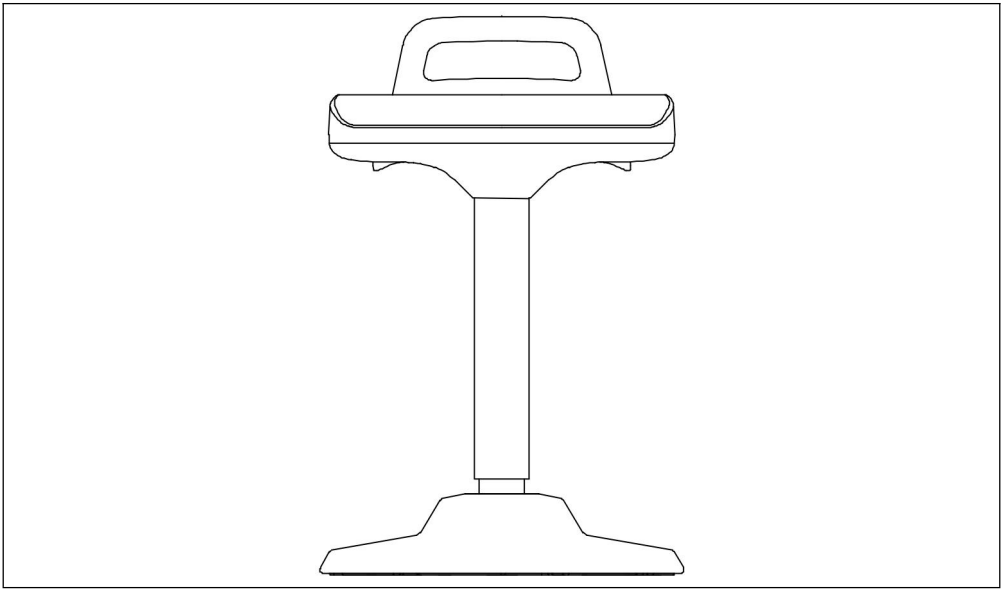

Fabricant : Shanghaimuxinmuyeyouxiangongsi
Adresse : Shuangchenglu 803nong11hao1602A-1609shi, baoshanqu, Shanghai 200000 CN.
Importé en Australie : SIHAO PTY LTD. 1 ROKEVA STREETASTWOOD NSW 2122 Australie
Importé aux États-Unis : Sanven Technology Ltd. Suite 250, 9166 Anaheim Place, Rancho Cucamonga, CA 91730

EC	REP

E-CrossStu GmbH
Mainzer Landstr.69, 60329 Frankfurt am Main.

UK	REP

YH CONSULTING LIMITED.
C/O YH Consulting Limited Office 147, Centurion House, London Road, Staines-upon-Thames, Surrey,

VEVOR®

TOUGH TOOLS, HALF PRICE

Technique Assistance et certificat de garantie électronique

www.vevor.com/support

VEVOR®

TOUGH TOOLS, HALF PRICE

Technisch Support und E-Garantie-Zertifikat www.vevor.com/support

AKTIVES SITZEN

BENUTZERHANDBUCH

MODELL NR.: Allen570

We continue to be committed to provide you tools with competitive price.
"Save Half", "Half Price" or any other similar expressions used by us only represents an estimate of savings you might benefit from buying certain tools with us compared to the major top brands and does not necessarily mean to cover all categories of tools offered by us. You are kindly reminded to verify carefully when you are placing an order with us if you are actually saving half in comparison with the top major brands.

VEVOR®

TOUGH TOOLS, HALF PRICE

Active Seating

MODELLNR.: Allen570

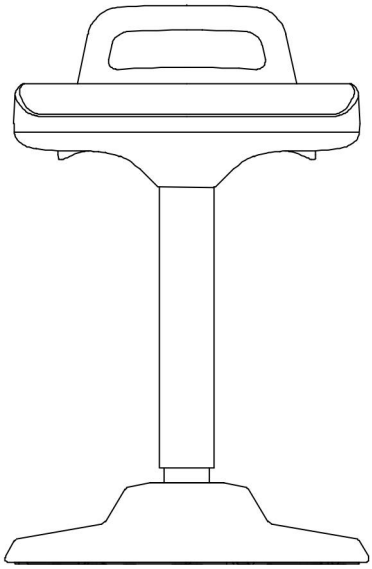

NEED HELP? CONTACT US!

Have product questions? Need technical support? Please feel free to contact us:

Technical Support and E-Warranty Certificate
www.vevor.com/support

This is the original instruction, please read all manual instructions carefully before operating. VEVOR reserves a clear interpretation of our user manual. The appearance of the product shall be subject to the product you received. Please forgive us that we won't inform you again if there are any technology or software updates on our product.

⚠ **WARNUNG:**

Bitte lesen Sie dieses Handbuch vor der Verwendung des Produkts sorgfältig durch. Andernfalls kann es zu schweren Verletzungen kommen.

VORSICHTSMASSNAHMEN BEI DER MONTAGE

17. Führen Sie die Montage nur gemäß dieser Anleitung durch. Eine unsachgemäße Montage kann zu Gefahren führen.

18. Tragen Sie während der Montage eine ANSI-geprüfte Schutzbrille und robuste Arbeitshandschuhe.

19. Halten Sie den Versammlungsbereich sauber und gut beleuchtet.

20. Halten Sie während der Montage unbeteiligte Zuschauer vom Bereich fern.

21. Nicht zusammenbauen, wenn Sie müde sind oder unter Einfluss von Alkohol, Drogen oder Medikamenten stehen.

22. Die Produktfunktionen gelten nur für ordnungsgemäß und vollständig montierte Produkte.

23. Montieren Sie es auf einer flachen, ebenen, harten und glatten Oberfläche, die den Active Seating sicher tragen kann.

24. Weitere Informationen zu den auf den folgenden Seiten aufgeführten Teilen finden Sie im Montagediagramm dieses Handbuchs. Packen Sie alle Teile in einem sauberen Arbeitsbereich aus und trennen Sie sie.

VORSICHTSMASSNAHMEN BEIM GEBRAUCH

UM SCHWERE VERLETZUNGEN UND TOD DURCH KIPPEN ZU VERMEIDEN:

9. Dieses Produkt ist kein Spielzeug. Erlauben Sie Kindern nicht, mit diesem Artikel oder in seiner Nähe zu spielen.

10. Überschreiten Sie vor dem Bewegen nicht die Gewichtskapazität.

11. Nur auf einer flachen, ebenen, harten und glatten Oberfläche verwenden, die einen voll beladenen Aktivsitz sicher tragen kann.

12. Nur bestimmungsgemäß verwenden.
Vor jedem Gebrauch prüfen; nicht verwenden, wenn Teile lose oder beschädigt sind.

TECHNICAL SPECIFICATIONS

Modell	Allen570
Technische Daten (L x B x H) (mm)	470*380*（625-875）
Verpackungsgröße (L x B x H) (mm)	500*210*420
Nettogewicht / kg)	Etwa 6,5

Bruttogewicht (kg)	Über 4.7

*Produkte wie Spezifikationen, Aussehen und Design können ohne vorherige Ankündigung geändert werden.

PACKAGE CONTENTS

A	1PC
B	1PC
C	1PC
D	1PC
E	1PC
F	4PC
G	1PC

ASSEMBLY STEPS

SCHRITT 1	**SCHRITT 2**

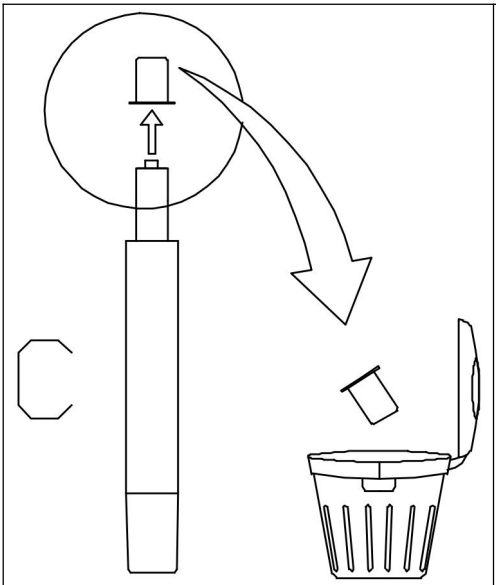

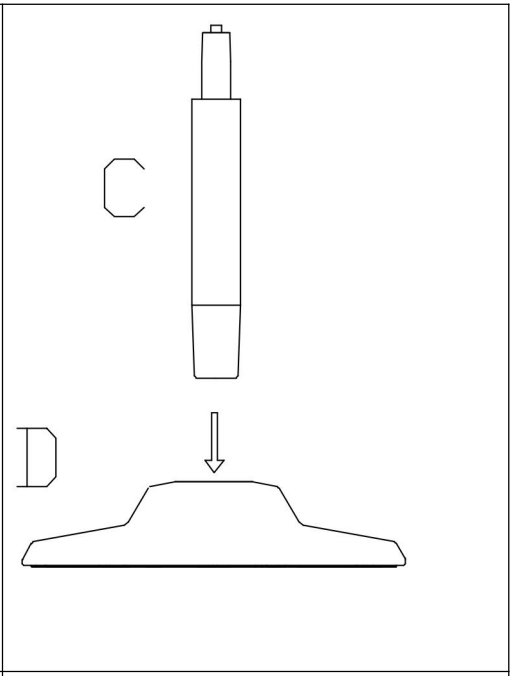

SCHRITT 3

SCHRITT 4

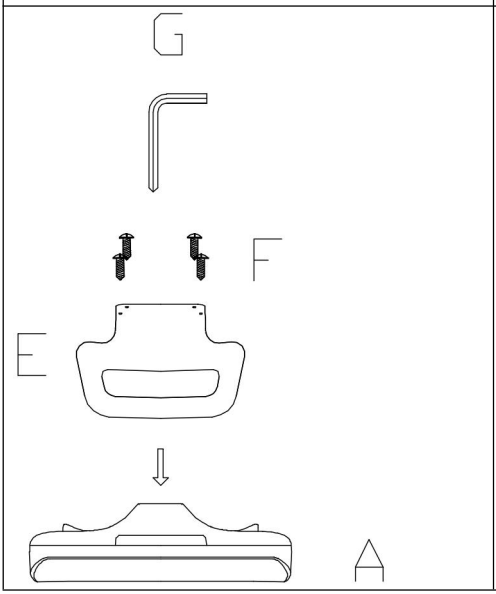

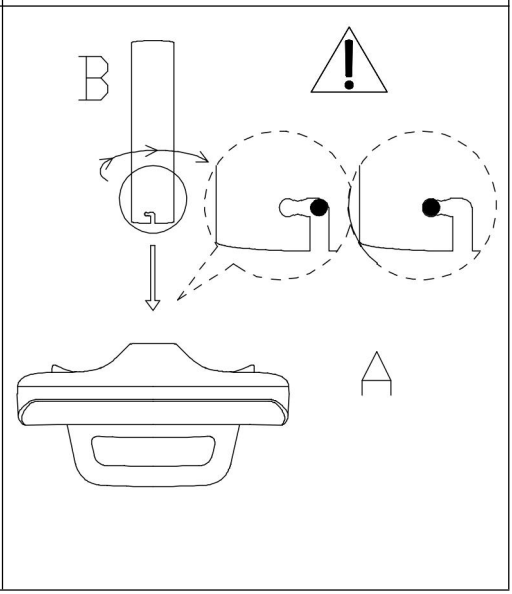

SCHRITT 5

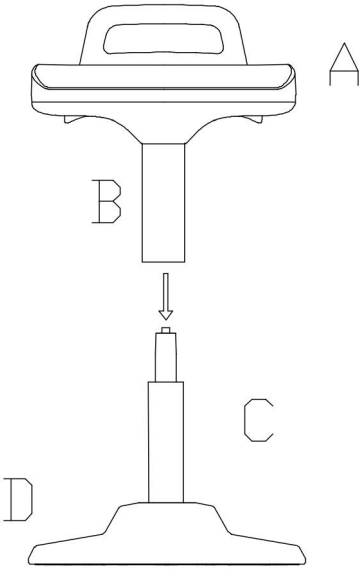

USER INSTRUCTIONS

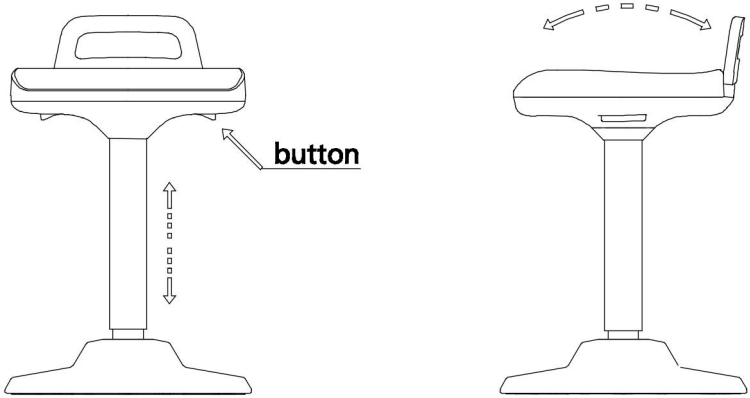

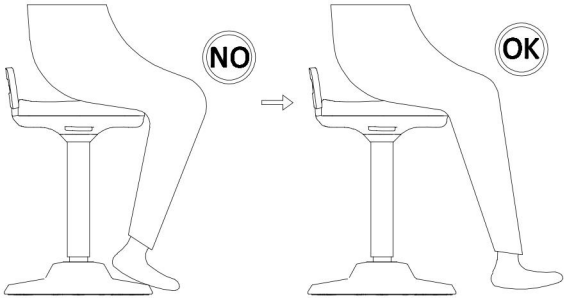

Achtung: NICHT NACH HINTEN LEHNEN! Kippen Sie den Wackelhocker nicht gewaltsam über die senkrechte Position hinaus, um das Sturzrisiko zu minimieren.

Achtung: Benutzen Sie den Hocker nicht mit nur einem Fuß oder ohne Füße auf dem Boden.

COMPLETION

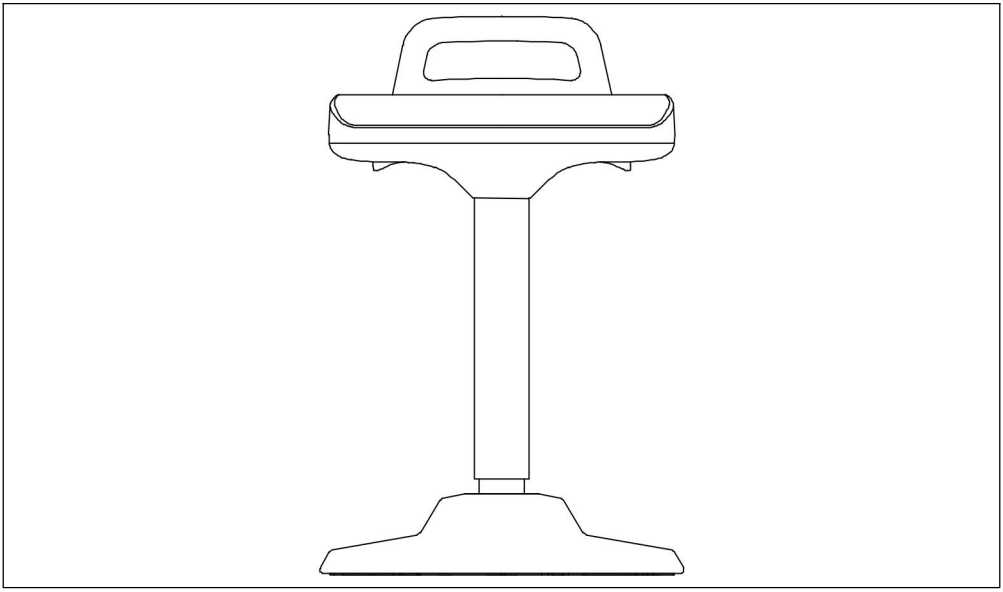

Hersteller: Shanghaimuxinmuyeyouxiangongsi
Adresse: Shuangchenglu 803nong11hao1602A-1609shi, Baoshanqu, Shanghai 200000 CN.
Nach AUS importiert: SIHAO PTY LTD. 1 ROKEVA STREETEASTWOOD NSW 2122 Australien
Importiert in die USA: Sanven Technology Ltd. Suite 250, 9166 Anaheim Place, Rancho Cucamonga, CA 91730

EC	REP

E-CrossStu GmbH
Mainzer Landstr.69, 60329 Frankfurt am Main.

UK	REP

YH CONSULTING LIMITED.
C/O YH Consulting Limited Office 147, Centurion House, London Road, Staines-upon-Thames, Surrey,

VEVOR®

TOUGH TOOLS, HALF PRICE

Technisch Support und E-Garantie-Zertifikat

www.vevor.com/support

VEVOR®

TOUGH TOOLS, HALF PRICE

Tecnico Supporto e certificato di garanzia elettronica www.vevor.com/support

POSTI A SEDERE ATTIVI

MANUALE D' USO

MODELLO NUMERO.: Allen570

We continue to be committed to provide you tools with competitive price.
"Save Half", "Half Price" or any other similar expressions used by us only represents an estimate of savings you might benefit from buying certain tools with us compared to the major top brands and does not necessarily mean to cover all categories of tools offered by us. You are kindly reminded to verify carefully when you are placing an order with us if you are actually saving half in comparison with the top major brands.

VEVOR®

TOUGH TOOLS, HALF PRICE

Active Seating

MODELLO N.: Allen570

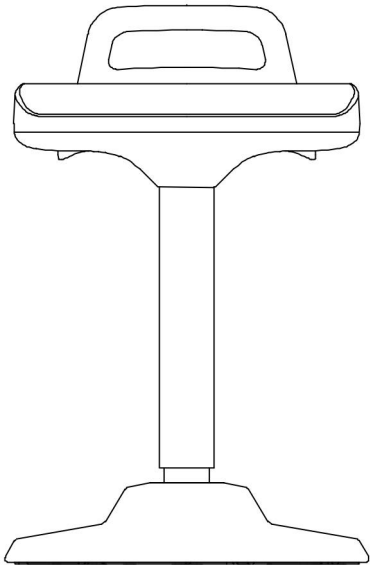

NEED HELP? CONTACT US!

Have product questions? Need technical support? Please feel free to contact us:

Technical Support and E-Warranty Certificate
www.vevor.com/support

This is the original instruction, please read all manual instructions carefully before operating. VEVOR reserves a clear interpretation of our user manual. The appearance of the product shall be subject to the product you received. Please forgive us that we won't inform you again if there are any technology or software updates on our product.

⚠ **AVVERTIMENTO:**

Si prega di leggere attentamente questo manuale prima di utilizzare il prodotto. In caso contrario, potrebbero verificarsi lesioni gravi.

PRECAUZIONI DI MONTAGGIO

25. Assemblare solo secondo queste istruzioni. Un montaggio improprio può creare pericoli.

26. Indossare occhiali di sicurezza approvati ANSI e guanti da lavoro pesanti durante il montaggio.

27. Mantenere l'area di assemblaggio pulita e ben illuminata.

28. Tenere gli astanti lontani dall'area durante il montaggio.

29. Non montare in caso di stanchezza o sotto l'effetto di alcol, droghe o farmaci.

30. Le funzionalità del prodotto si applicano solo ai prodotti correttamente e completamente assemblati.

31. Montare su una superficie piana, livellata, dura e liscia in grado di sostenere in sicurezza l'Active Seating.

32. Per ulteriori informazioni riguardanti le parti elencate nelle pagine seguenti, fare riferimento allo Schema di Montaggio di questo manuale. Scartare e separare tutte le parti in un'area di lavoro pulita.

CONSERVARE QUESTE ISTRUZIONI

USARE LE PRECAUZIONI

PER PREVENIRE LESIONI GRAVI E MORTE DOVUTE AL RIBALTAMENTO:

13. Questo prodotto non è un giocattolo. Non permettere ai bambini di giocare con o vicino a questo articolo.

14. Non superare le capacità di peso, prima dello spostamento.

15. Utilizzare solo su una superficie piana, livellata, dura e liscia in grado di supportare in sicurezza un Active Seating a pieno carico.

16. Utilizzare solo come previsto.
Ispezionare prima di ogni utilizzo; non utilizzare se le parti sono allentate o danneggiate.

TECHNICAL SPECIFICATIONS

Modello	Allen570
Dimensioni del prodotto (LxLxA)(mm)	470*380*（625-875）
Dimensioni imballo (LxLxA) (mm)	500*210*420
Peso netto (chilogrammo)	Circa 6,5
Peso lordo (chilogrammo)	Circa 4.7

*Prodotti quali specifiche, aspetto e design sono soggetti a modifiche senza preavviso.

PACKAGE CONTENTS

A	1PC
B	1PC
C	1PC
D	1PC
E	1PC
F	4PC
G	1PC

ASSEMBLY STEPS

PASSO 1	PASSO 2
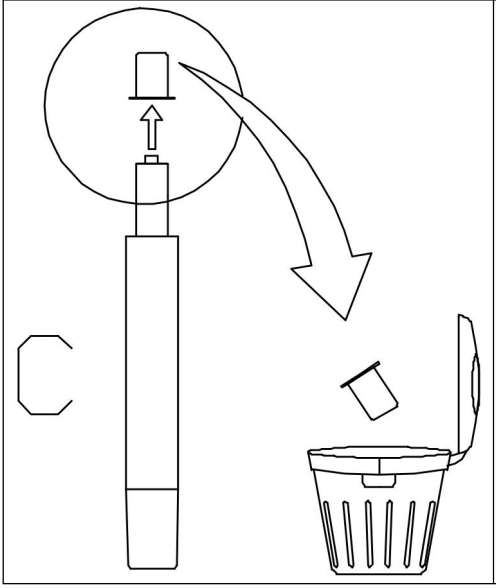	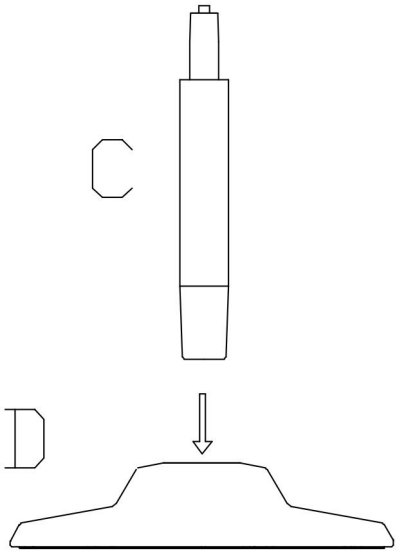

PASSO3	**PASSO4**
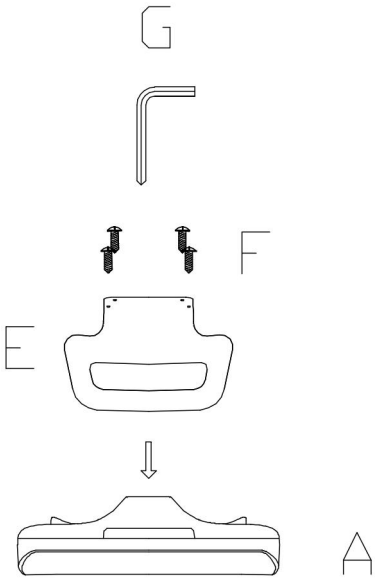	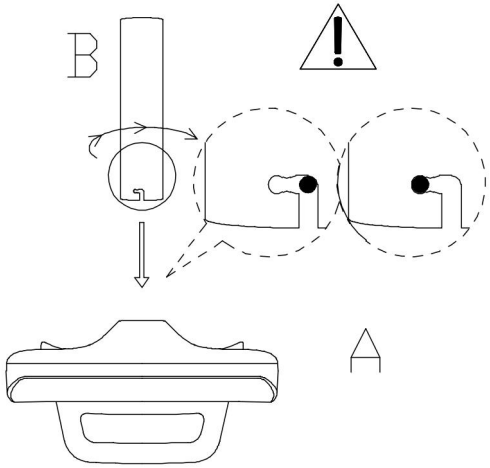

PASSO5

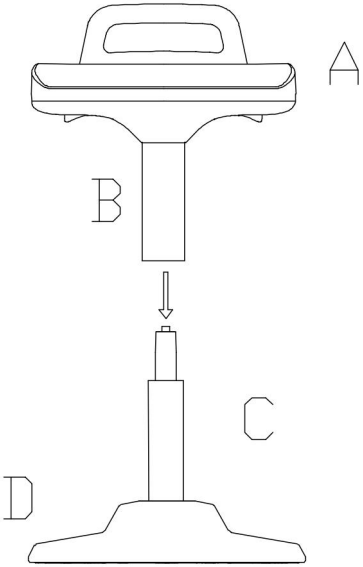

USER INSTRUCTIONS

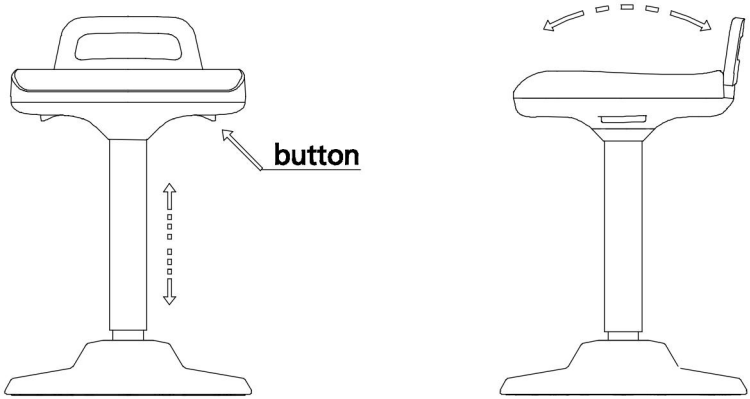

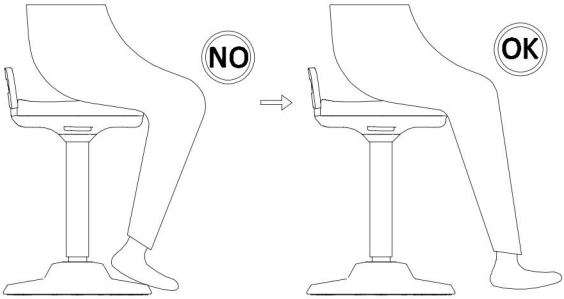

Avvertenza: NON APPOGGIARSI ALL'INDIETRO! Non inclinare violentemente lo sgabello oscillante oltre la posizione verticale per ridurre al minimo il rischio di caduta.

Avvertenza: non utilizzare lo sgabello con un solo piede o senza i piedi a terra.

COMPLETION

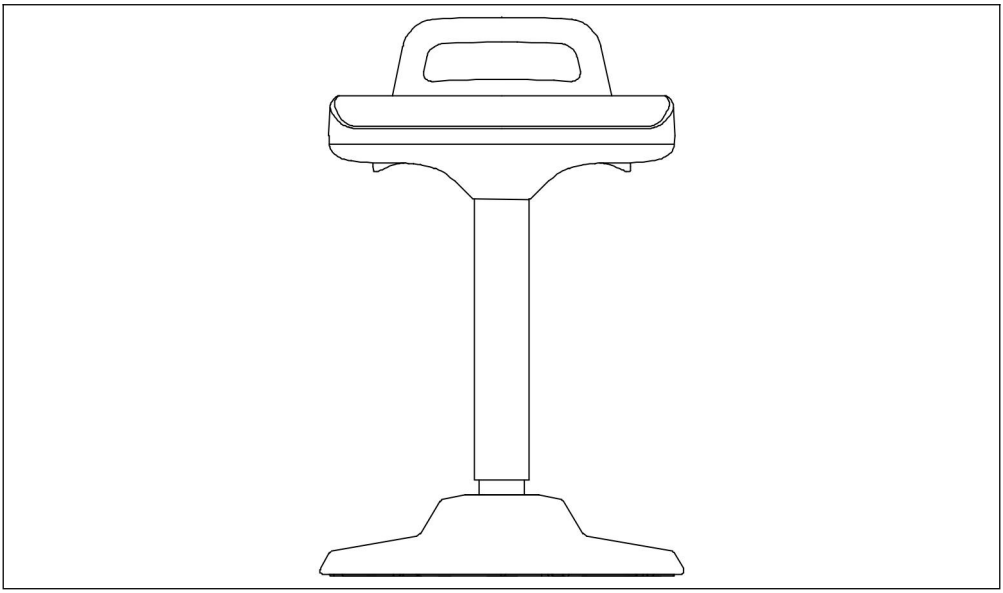

Produttore: Shanghaimuxinmuyeyouxiangongsi
Indirizzo: Shuangchenglu 803nong11hao1602A-1609shi, baoshanqu, shanghai 200000 CN.
Importato in AUS: SIHAO PTY LTD. 1 ROKEVA STREETEASTWOOD NSW 2122 Australia
Importato negli Stati Uniti: Sanven Technology Ltd. Suite 250, 9166 Anaheim Place, Rancho Cucamonga, CA 91730

EC	REP

E-CrossStu GmbH
Mainzer Landstr.69, 60329 Frankfurt am Main.

UK	REP

YH CONSULTING LIMITED.
C/O YH Consulting Limited Office 147, Centurion House, London Road, Staines-upon-Thames, Surrey, TW18 4AX

VEVOR®

TOUGH TOOLS, HALF PRICE

Tecnico Supporto e certificato di garanzia elettronica

www.vevor.com/support

VEVOR®

TOUGH TOOLS, HALF PRICE

Técnico Soporte y certificado de garantía electrónica www.vevor.com/support

ASIENTOS ACTIVOS

MANUAL DE USUARIO

N º DE MODELO.: allen570

We continue to be committed to provide you tools with competitive price.
"Save Half", "Half Price" or any other similar expressions used by us only represents an estimate of savings you might benefit from buying certain tools with us compared to the major top brands and does not necessarily mean to cover all categories of tools offered by us. You are kindly reminded to verify carefully when you are placing an order with us if you are actually saving half in comparison with the top major brands.

VEVOR®

TOUGH TOOLS, HALF PRICE

Active Seating

NÚMERO DE MODELO: Allen570

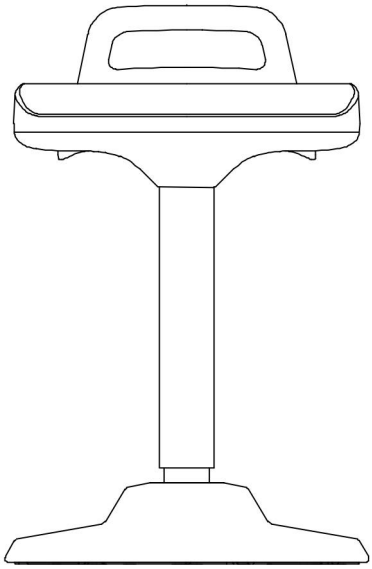

NEED HELP? CONTACT US!

Have product questions? Need technical support? Please feel free to contact us:

Technical Support and E-Warranty Certificate
www.vevor.com/support

This is the original instruction, please read all manual instructions carefully before operating. VEVOR reserves a clear interpretation of our user manual. The appearance of the product shall be subject to the product you received. Please forgive us that we won't inform you again if there are any technology or software updates on our product.

⚠ **ADVERTENCIA:**

Lea atentamente este manual antes de utilizar el producto. De lo contrario, podrían producirse lesiones graves.

PRECAUCIONES DE MONTAJE

33. Ensamble únicamente de acuerdo con estas instrucciones. Un montaje inadecuado puede crear peligros.

34. Use gafas de seguridad aprobadas por ANSI y guantes de trabajo resistentes durante el montaje.

35. Mantenga el área de reunión limpia y bien iluminada.

36. Mantenga a los transeúntes fuera del área durante el montaje.

37. No se reúna cuando esté cansado o bajo la influencia de alcohol, drogas o medicamentos.

38. Las capacidades del producto se aplican únicamente a productos ensamblados de manera adecuada y completa.

39. Ensamble sobre una superficie plana, nivelada, dura y lisa capaz de soportar de manera segura el asiento activo.

40. Para obtener información adicional sobre las piezas enumeradas en las siguientes páginas, consulte el diagrama de montaje de este manual. Desenvuelva y separe todas las piezas en un área de trabajo limpia.

GUARDA ESTAS INSTRUCCIONES

PRECAUCIONES DE USO

PARA EVITAR LESIONES GRAVES Y LA MUERTE POR VUELCO:

17. Este producto no es un juguete. No permita que los niños jueguen con este artículo o cerca de él.

18. No exceda las capacidades de peso antes de moverse.

19. Úselo únicamente sobre una superficie plana, nivelada, dura y lisa capaz de soportar de manera segura un asiento activo completamente cargado.

20. Úselo únicamente según lo previsto.
Inspeccionar antes de cada uso; no lo utilice si las piezas están sueltas o dañadas.

TECHNICAL SPECIFICATIONS

Modelo	allen570
Dimensiones del producto (LxAnxAl)(mm)	470*380*（625-875）
Tamaño del embalaje (largo x ancho x alto) (mm)	500*210*420
Peso neto / kg)	Alrededor de 6,5
Peso bruto (kg)	Alrededor de 4,7

*Productos como especificaciones, apariencia y diseño están sujetos a modificaciones sin previo aviso.

PACKAGE CONTENTS

A	1PC
B	1PC
C	1PC
D	1PC
E	1PC
F	4PC
G	1PC

ASSEMBLY STEPS

PASO 1	PASO 2
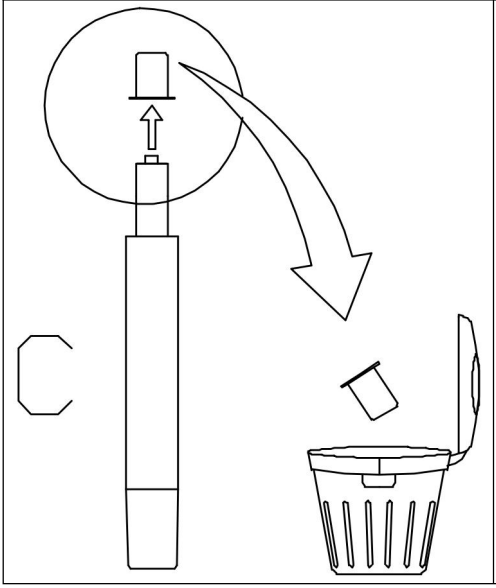	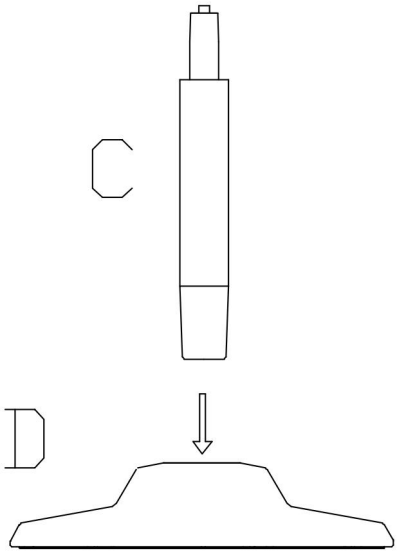

PASO 3	**ETAPA 4**
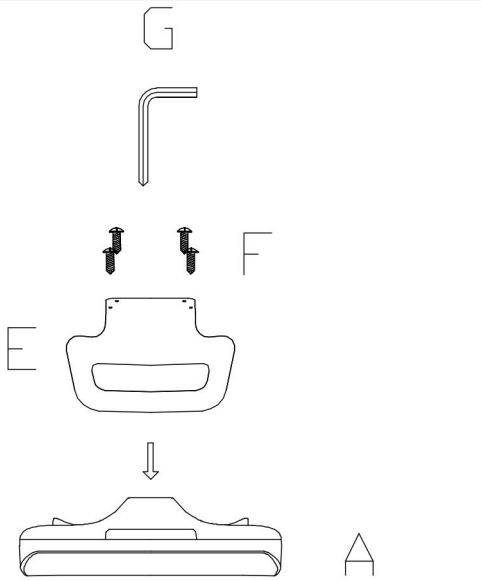	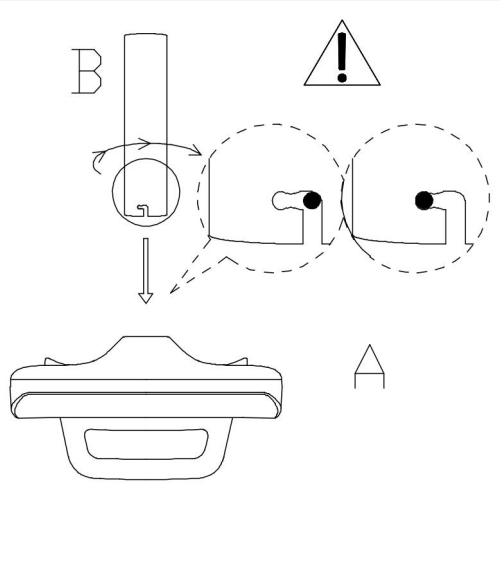

PASO 5

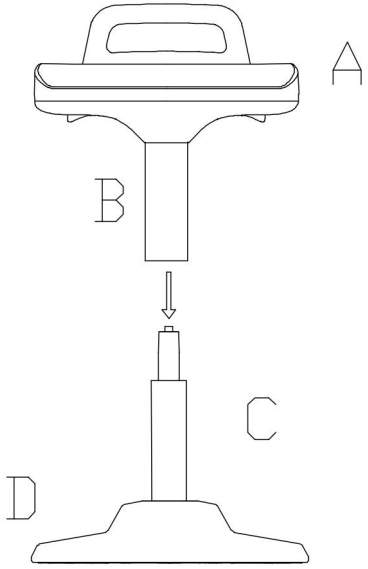

USER INSTRUCTIONS

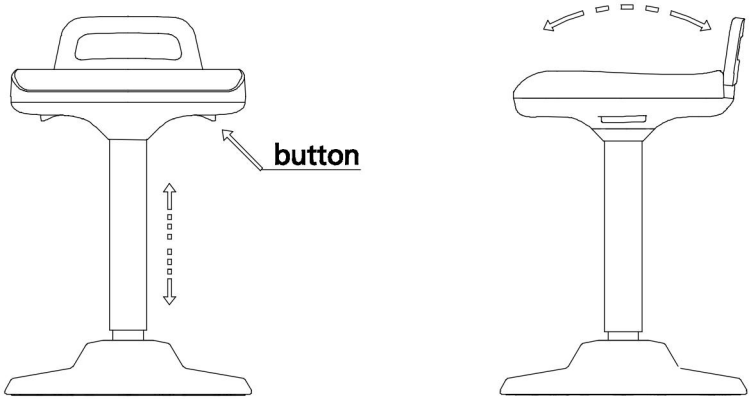

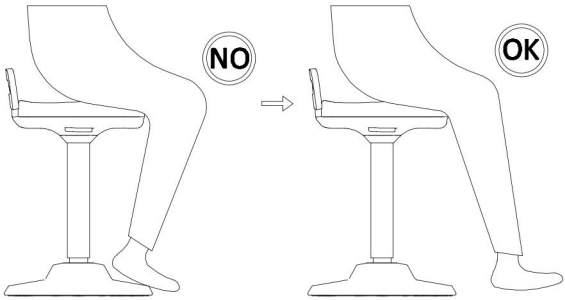

Advertencia: ¡NO SE INCLINE HACIA ATRÁS! No incline violentamente el taburete oscilante más allá de la posición vertical para minimizar el riesgo de caída.

Advertencia: No utilice el taburete con un solo pie o sin ningún pie en el suelo.

COMPLETION

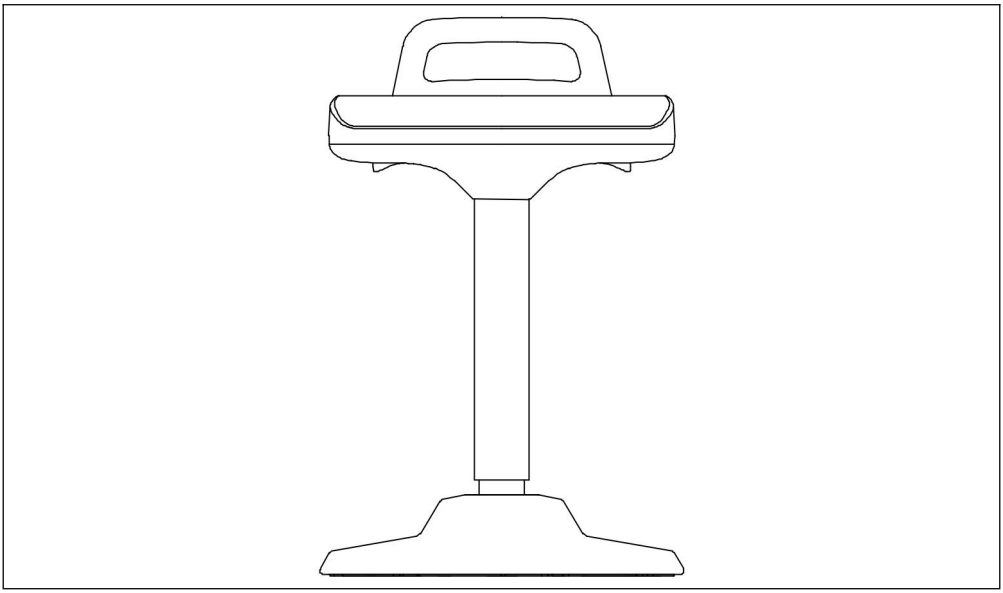

Fabricante: Shanghaimuxinmuyeyouxiangongsi
Dirección: Shuangchenglu 803nong11hao1602A-1609shi, baoshanqu, shanghai 200000 CN.
Importado a AUS: SIHAO PTY LTD. 1 ROKEVA STREET ASTWOOD NSW 2122 Australia
Importado a EE. UU.: Sanven Technology Ltd. Suite 250, 9166 Anaheim Place, Rancho Cucamonga, CA 91730

EC	**REP**

E-CrossStu GmbH
Mainzer Landstr.69, 60329 Frankfurt am Main.

UK	**REP**

YH CONSULTING LIMITED.
C/O YH Consulting Limited Office 147, Centurion House, London Road, Staines-upon-Thames, Surrey, TW18 4AX

VEVOR®

TOUGH TOOLS, HALF PRICE

Técnico Certificado de soporte y garantía electrónica

www.vevor.com/support

VEVOR®

TOUGH TOOLS, HALF PRICE

Techniczny Certyfikat wsparcia i e-gwarancji www.vevor.com/support

AKTYWNE SIEDZENIA

INSTRUKCJA OBSŁUGI

MODEL NR.: Allena570

We continue to be committed to provide you tools with competitive price.
"Save Half", "Half Price" or any other similar expressions used by us only represents an estimate of savings you might benefit from buying certain tools with us compared to the major top brands and does not necessarily mean to cover all categories of tools offered by us. You are kindly reminded to verify carefully when you are placing an order with us if you are actually saving half in comparison with the top major brands.

VEVOR®

TOUGH TOOLS, HALF PRICE

Active Seating

NR MODELU: Allen570

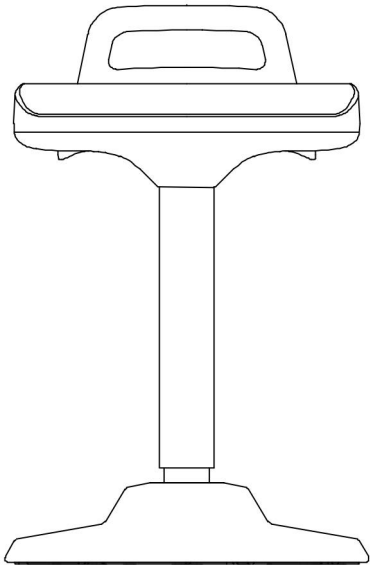

NEED HELP? CONTACT US!

Have product questions? Need technical support? Please feel free to contact us:

Technical Support and E-Warranty Certificate
www.vevor.com/support

This is the original instruction, please read all manual instructions carefully before operating. VEVOR reserves a clear interpretation of our user manual. The appearance of the product shall be subject to the product you received. Please forgive us that we won't inform you again if there are any technology or software updates on our product.

⚠ **OSTRZEŻENIE:**

Przed użyciem produktu prosimy o dokładne zapoznanie się z niniejszą instrukcją. Niezastosowanie się do tego może spowodować poważne obrażenia.

ŚRODKI OSTROŻNOŚCI MONTAŻOWEJ

41. Montaż wyłącznie zgodnie z niniejszą instrukcją. Nieprawidłowy montaż może stworzyć zagrożenie.

42. Podczas montażu należy nosić okulary ochronne i wytrzymałe rękawice robocze zatwierdzone przez ANSI.

43. Utrzymuj miejsce zbiórki w czystości i dobrze oświetlone.

44. Podczas montażu należy trzymać osoby postronne z dala od obszaru.

45. Nie należy montować, gdy jest się zmęczonym lub pod wpływem alkoholu, narkotyków lub leków.

46. Możliwości produktu dotyczą wyłącznie produktów prawidłowo i całkowicie zmontowanych.

47. Zmontuj na płaskiej, równej, twardej i gładkiej powierzchni, która może bezpiecznie utrzymać aktywne siedzisko.

48. Dodatkowe informacje dotyczące części wymienionych na kolejnych stronach można znaleźć w schemacie montażu w niniejszej instrukcji. Rozpakuj i oddziel wszystkie części w czystym miejscu pracy.

ZACHOWAJ TE INSTRUKCJE

STOSOWAĆ ŚRODKI OSTROŻNOŚCI

ABY ZAPOBIEC POWAŻNYM OBRAŻeniom LUB ŚMIERCI W PRZYPADKU WYWROTU:

21. Ten produkt nie jest zabawką. Nie pozwalaj dzieciom bawić się tym przedmiotem lub w jego pobliżu.

22. Przed przeniesieniem nie należy przekraczać udźwigu.

23. Używaj wyłącznie na płaskiej, równej, twardej i gładkiej powierzchni, która może bezpiecznie utrzymać w pełni obciążone aktywne siedzisko.

24. Używaj wyłącznie zgodnie z przeznaczeniem.
Sprawdź przed każdym użyciem; nie używać, jeśli części są luźne lub uszkodzone.

TECHNICAL SPECIFICATIONS

Model	Allena570
wymiary produktu (DxSxW) (mm)	470*380* (625-875)
Rozmiar opakowania (dł. x szer. x wys.) (mm)	500*210*420
Masa netto (kg)	Około 6,5
Waga brutto (kg)	Około 4,7

*Produkty takie jak dane techniczne, wygląd i konstrukcja mogą podlegać modyfikacjom bez wcześniejszego powiadomienia.

PACKAGE CONTENTS

A	1PC
B	1PC
C	1PC
D	1PC
E	1PC
F	4PC
G	1PC

ASSEMBLY STEPS

KROK 1	KROK 2
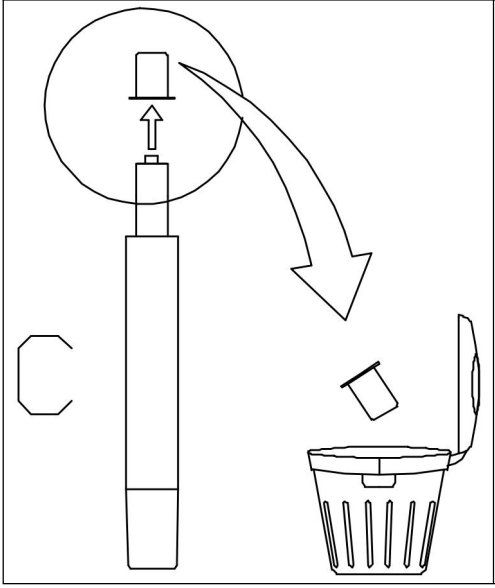	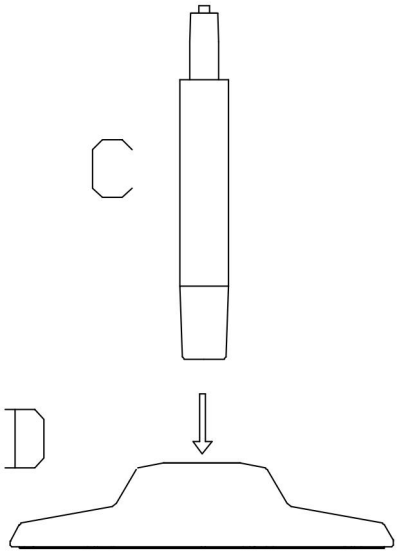

KROK 3	**KROK 4**
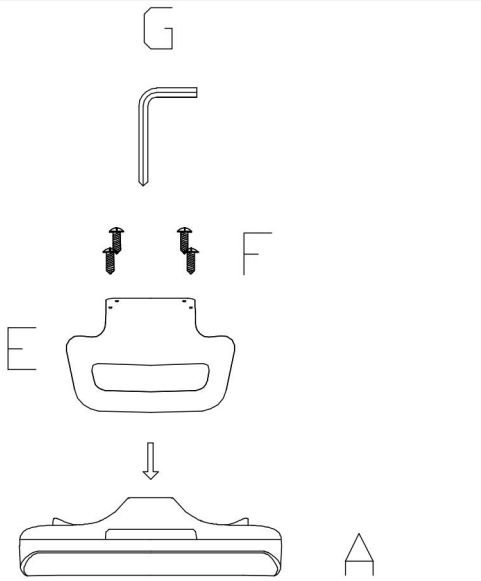	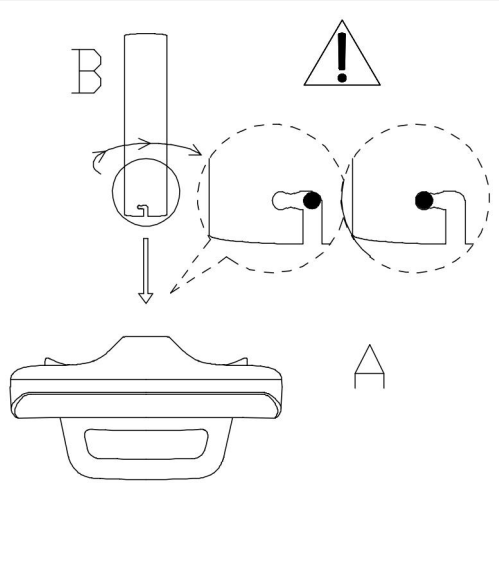

KROK 5

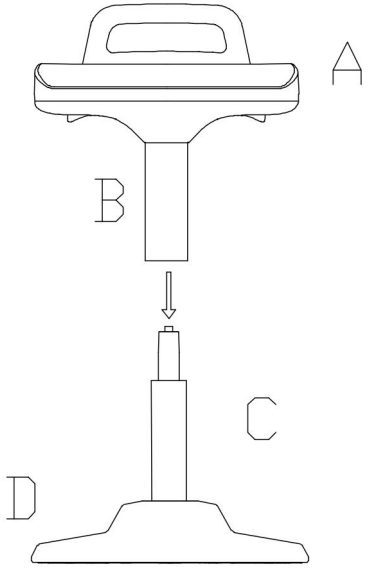

USER INSTRUCTIONS

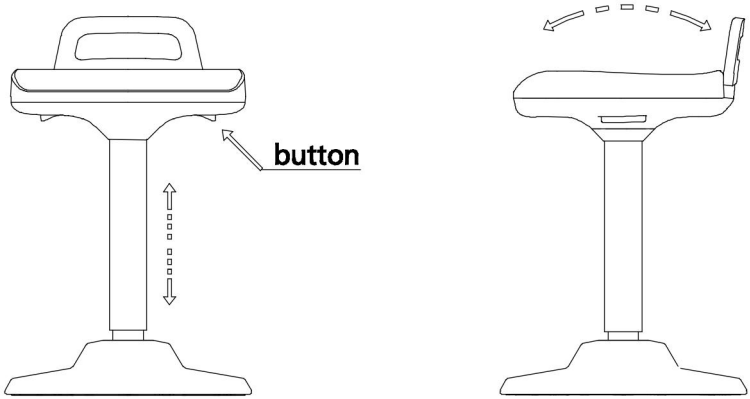

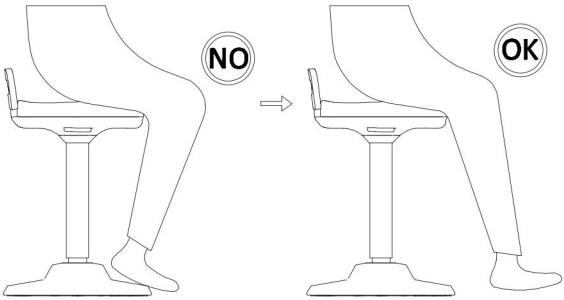

Uwaga: nie odchylaj się do tyłu! Aby zminimalizować ryzyko upadku, nie przechylaj gwałtownie taboretu poza pozycję pionową.

Ostrzeżenie: Nie używaj stołka, trzymając tylko jedną stopę lub nie dotykając ziemi żadnymi stopami.

COMPLETION

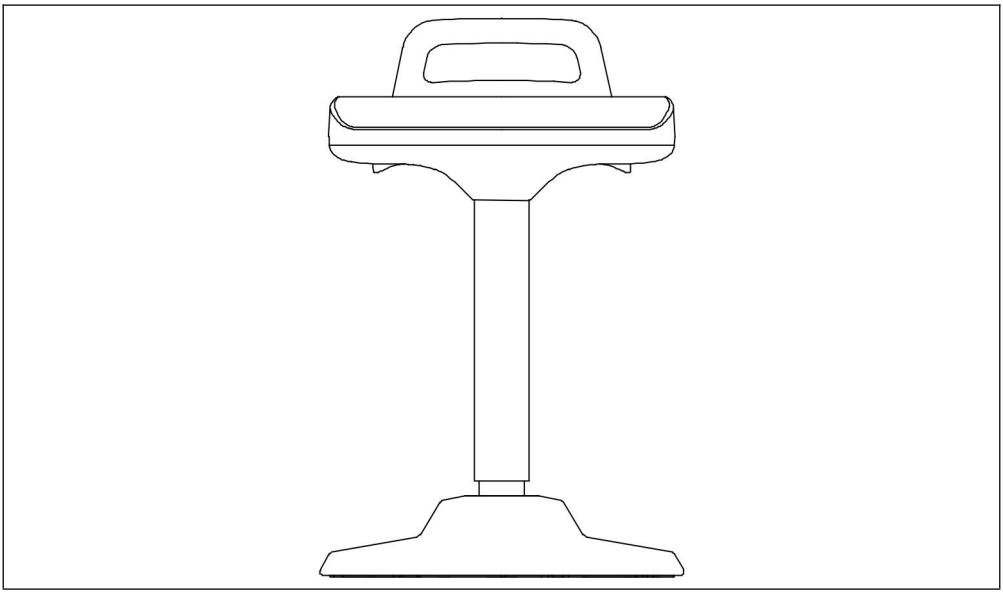

Producent: Shanghaimuxinmuyeyouxiangongsi
Adres: Shuangchenglu 803nong11hao1602A-1609shi, baoshanqu, szanghaj 200000 CN.
Import do AUS: SIHAO PTY LTD. 1 ROKEVA STREETEASTWOOD NSW 2122 Australia
Import do USA: Sanven Technology Ltd. Suite 250, 9166 Anaheim Place, Rancho Cucamonga, CA 91730

EC	REP

E-CrossStu GmbH
Mainzer Landstr.69, 60329 Frankfurt am Main.

UK	REP

YH CONSULTING LIMITED.
C/O YH Consulting Limited Office 147, Centurion House, London Road, Staines-upon-Thames, Surrey, TW18 4AX

VEVOR®

TOUGH TOOLS, HALF PRICE

Techniczny Certyfikat wsparcia i e-gwarancji

www.vevor.com/support

VEVOR®

TOUGH TOOLS, HALF PRICE

Technisch Ondersteuning en e-garantiecertificaat www.vevor.com/support

ACTIEVE ZITPLAATSEN

HANDLEIDING

MODELNR.: Allen570

We continue to be committed to provide you tools with competitive price.
"Save Half", "Half Price" or any other similar expressions used by us only represents an estimate of savings you might benefit from buying certain tools with us compared to the major top brands and does not necessarily mean to cover all categories of tools offered by us. You are kindly reminded to verify carefully when you are placing an order with us if you are actually saving half in comparison with the top major brands.

VEVOR®

TOUGH TOOLS, HALF PRICE

Active Seating

MODELNR.: Allen570

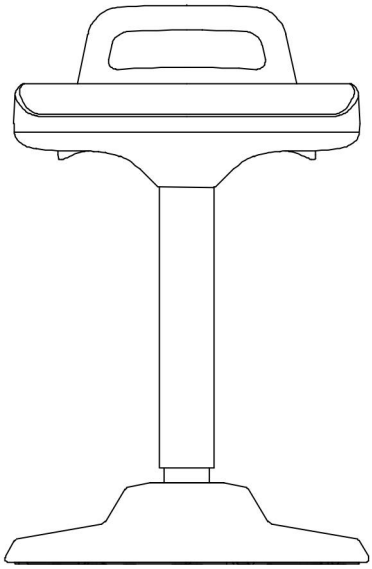

NEED HELP? CONTACT US!

Have product questions? Need technical support? Please feel free to contact us:

Technical Support and E-Warranty Certificate
www.vevor.com/support

This is the original instruction, please read all manual instructions carefully before operating. VEVOR reserves a clear interpretation of our user manual. The appearance of the product shall be subject to the product you received. Please forgive us that we won't inform you again if there are any technology or software updates on our product.

⚠ **WAARSCHUWING:**

Lees deze handleiding zorgvuldig door voordat u het product gebruikt. Als u dit niet doet, kan dit leiden tot ernstig letsel.

MONTAGEVOORZORGSMAATREGELEN

49. Monteer uitsluitend volgens deze instructies. Onjuiste montage kan gevaren veroorzaken.

50. Draag tijdens de montage een ANSI-goedgekeurde veiligheidsbril en stevige werkhandschoenen.

51. Houd de verzamelplaats schoon en goed verlicht.

52. Houd omstanders tijdens de montage uit de buurt.

53. Niet monteren als u moe bent of onder invloed bent van alcohol, drugs of medicijnen.

54. De productmogelijkheden zijn alleen van toepassing op correct en volledig gemonteerde producten.

55. Monteer op een vlakke, vlakke, harde en gladde ondergrond die de Active Seating veilig kan ondersteunen.

56. Voor aanvullende informatie over de onderdelen die op de volgende pagina's worden vermeld, verwijzen wij u naar het montageschema van deze handleiding. Pak alle onderdelen uit en scheid ze van elkaar op een schone werkplek.

BEWAAR DEZE INSTRUCTIES

GEBRUIK VOORZORGSMAATREGELEN

OM ERNSTIG LETSEL EN DE DOOD DOOR KANTELEN TE VOORKOMEN:

25. Dit product is geen speelgoed. Laat kinderen niet met of in de buurt van dit artikel spelen.

26. Overschrijd het gewicht niet voordat u gaat verhuizen.

27. Alleen gebruiken op een vlakke, vlakke, harde en gladde ondergrond die een volledig beladen Active Seating veilig kan ondersteunen.

28. Alleen gebruiken zoals bedoeld.
Inspecteer vóór elk gebruik; niet gebruiken als onderdelen los of beschadigd zijn.

TECHNICAL SPECIFICATIONS

Model	Allen570
Productafmetingen (LxBxH)(mm)	470*380*(625-875)
Verpakkingsgrootte (LxBxH) (mm)	500*210*420
Netto gewicht / kg)	Ongeveer 6,5
Bruto gewicht (kg)	Ongeveer 4,7

*Producten zoals specificaties, uiterlijk en ontwerp kunnen zonder voorafgaande kennisgeving worden gewijzigd.

PACKAGE CONTENTS

A	1PC
B	1PC
C	1PC
D	1PC
E	1PC
F	4PC
G	1PC

ASSEMBLY STEPS

STAP 1	STAP 2
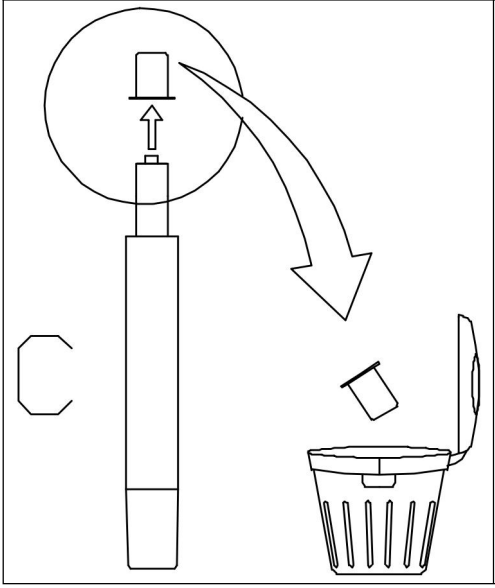	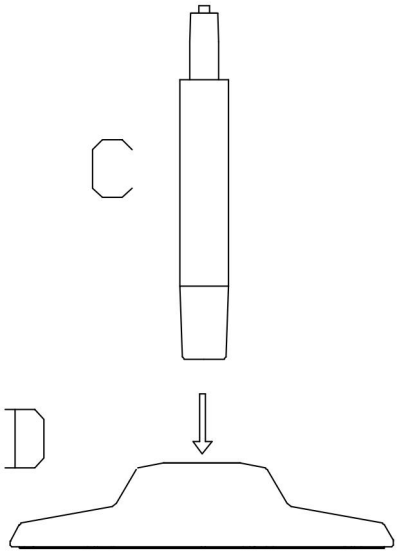

STAP 3	**STAP 4**
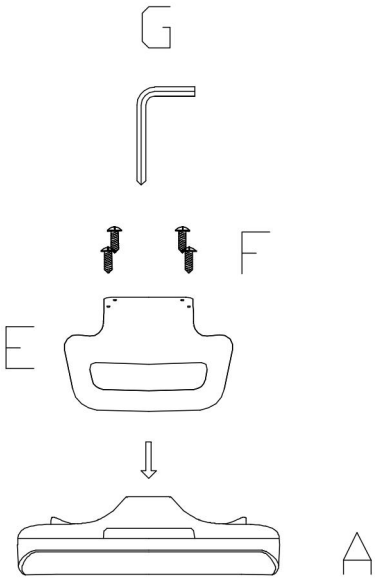	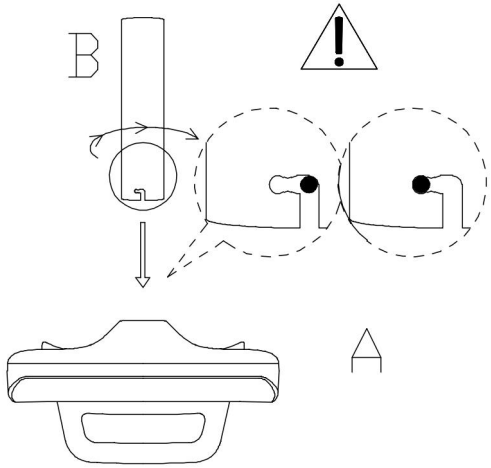

STAP 5

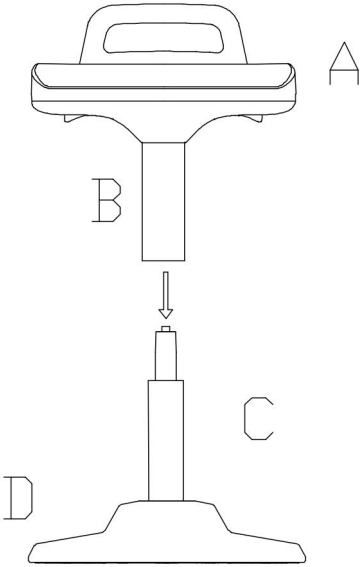

USER INSTRUCTIONS

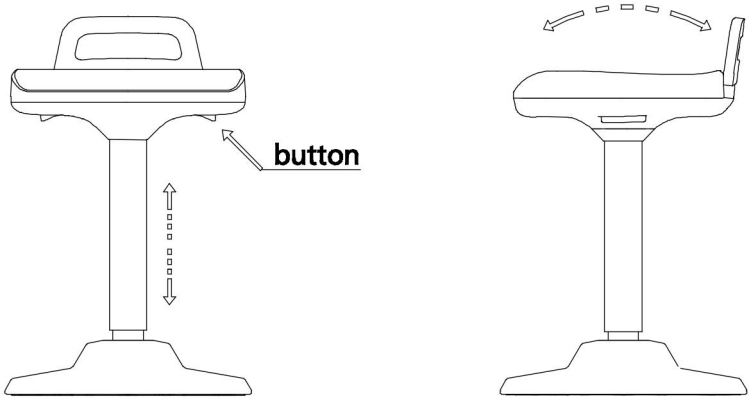

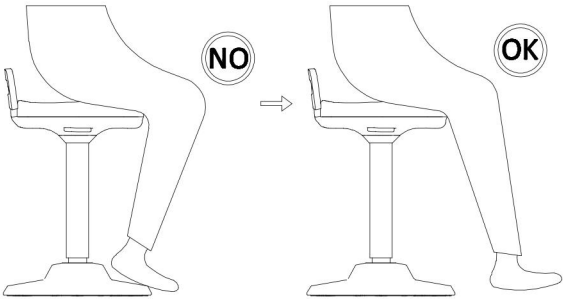

Waarschuwing: LEUN NIET ACHTERUIT! Kantel de wiebelkruk niet krachtig voorbij de verticale positie om het risico op vallen te minimaliseren.

Waarschuwing: Gebruik de kruk niet met slechts één voet of zonder voeten op de grond.

COMPLETION

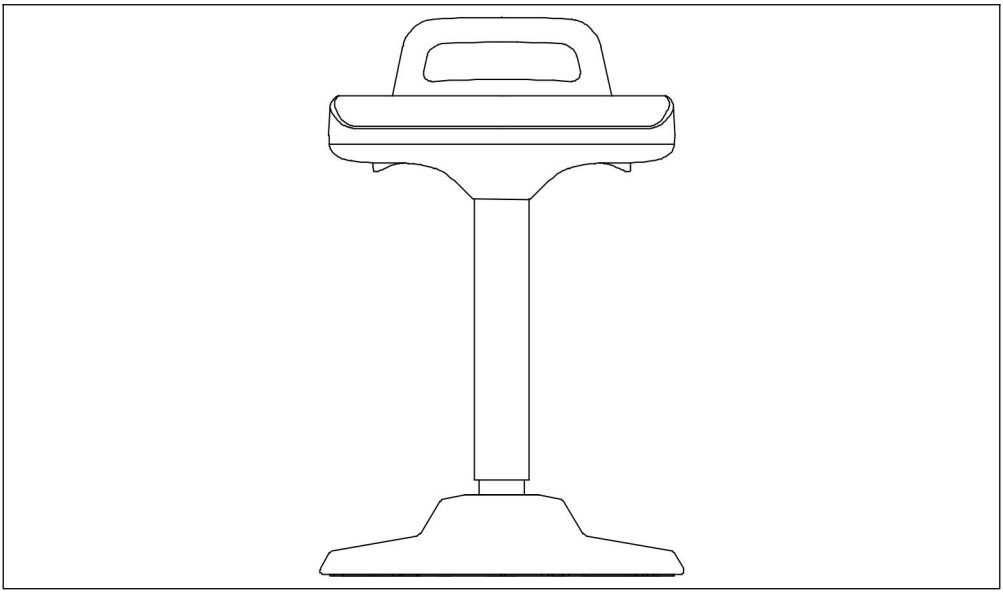

Fabrikant: Shanghaimuxinmuyeyouxiangongsi
Adres: Shuangchenglu 803nong11hao1602A-1609shi, baoshanqu, shanghai 200000 CN.
Geïmporteerd naar AUS: SIHAO PTY LTD. 1 ROKEVA STREETEASTWOOD NSW 2122 Australië
Geïmporteerd naar de VS: Sanven Technology Ltd. Suite 250, 9166 Anaheim Place, Rancho Cucamonga, CA 91730

EC	REP

E-CrossStu GmbH
Mainzer Landstr.69, 60329 Frankfurt am Main.

UK	REP

YH CONSULTING LIMITED.
C/O YH Consulting Limited Office 147, Centurion House, London Road, Staines-upon-Thames, Surrey, TW18 4AX

VEVOR®

TOUGH TOOLS, HALF PRICE

Technisch Ondersteuning en e-garantiecertificaat

www.vevor.com/support

VEVOR®

TOUGH TOOLS, HALF PRICE

Teknisk Support och e-garanticertifikat www.vevor.com/support

AKTIVA SITTPLATSER

ANVÄNDARMANUAL

MODELL NR.: Allen570

We continue to be committed to provide you tools with competitive price.
"Save Half", "Half Price" or any other similar expressions used by us only represents an estimate of savings you might benefit from buying certain tools with us compared to the major top brands and does not necessarily mean to cover all categories of tools offered by us. You are kindly reminded to verify carefully when you are placing an order with us if you are actually saving half in comparison with the top major brands.

VEVOR®

TOUGH TOOLS, HALF PRICE

Active Seating

MODELLNR: Allen570

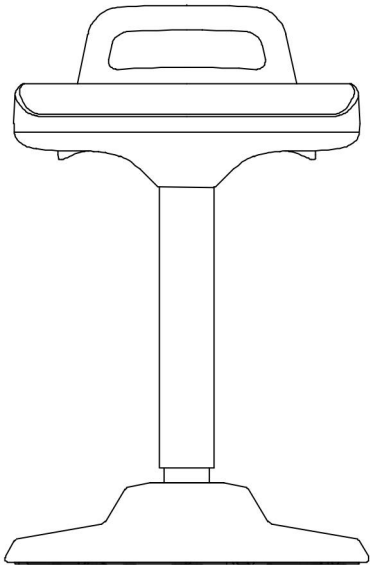

NEED HELP? CONTACT US!

Have product questions? Need technical support? Please feel free to contact us:

Technical Support and E-Warranty Certificate
www.vevor.com/support

This is the original instruction, please read all manual instructions carefully before operating. VEVOR reserves a clear interpretation of our user manual. The appearance of the product shall be subject to the product you received. Please forgive us that we won't inform you again if there are any technology or software updates on our product.

⚠ **VARNING:**

Läs denna bruksanvisning noggrant innan du använder produkten. Underlåtenhet att göra det kan leda till allvarliga skador.

FÖRSIKTIGHETSÅTGÄRDER FÖR MONTERING

57. Montera endast enligt dessa instruktioner. Felaktig montering kan skapa faror.

58. Använd ANSI-godkända skyddsglasögon och kraftiga arbetshandskar vid montering.

59. Håll monteringsområdet rent och väl upplyst.

60. Håll åskådare borta från området under monteringen.

61. Sätt dig inte ihop när du är trött eller påverkad av alkohol, droger eller mediciner.

62. Produktegenskaperna gäller endast för korrekt och färdigmonterade produkter.

63. Montera på en plan, jämn, hård och slät yta som säkert kan stödja Active Seating.

64. För ytterligare information om delarna som listas på följande sidor, se monteringsdiagrammet i denna manual. Packa upp och separera alla delar på ett rent arbetsområde.

SPARA DESSA E INSTRUKTIONER

ANVÄND FÖRSIKTIGHETSÅTGÄRDER

FÖR ATT FÖRHINDRA ALLVARLIGA SKADA OCH DÖDSFALL VID VÄTTNING:

29. Denna produkt är inte en leksak. Tillåt inte barn att leka med eller i närheten av den här produkten.

30. Överskrid inte viktkapaciteten innan du flyttar.

31. Använd endast på en plan, jämn, hård och slät yta som säkert kan stödja en fullastad Active Seat.

32. Använd endast som avsett.
Inspektera före varje användning; Använd inte om delar är lösa eller skadade.

TECHNICAL SPECIFICATIONS

Modell	Allen570
Produktens mått (LxBxH)(mm)	470*380*（625-875）
Förpackningsstorlek(LxBxH)(mm)	500*210*420
Nettovikt (kg)	Cirka 6,5
Bruttovikt (kg)	Cirka 4,7

*Produkter som specifikationer, utseende och design kan ändras utan föregående meddelande.

PACKAGE CONTENTS

A	1PC
B	1PC
C	1PC
D	1PC
E	1PC
F	4PC
G	1PC

ASSEMBLY STEPS

STEG 1	STEG 2
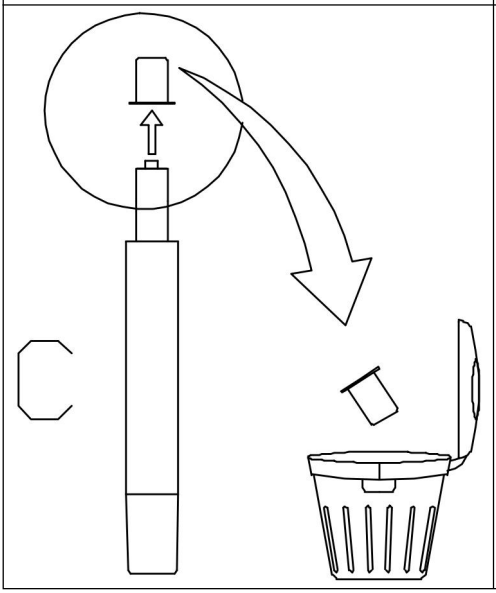	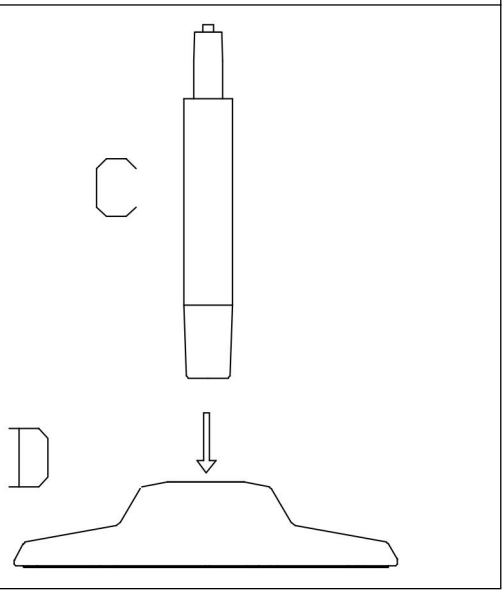

STEG 3	**STEG 4**
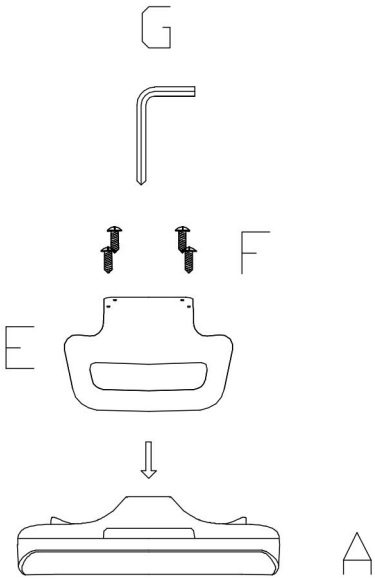	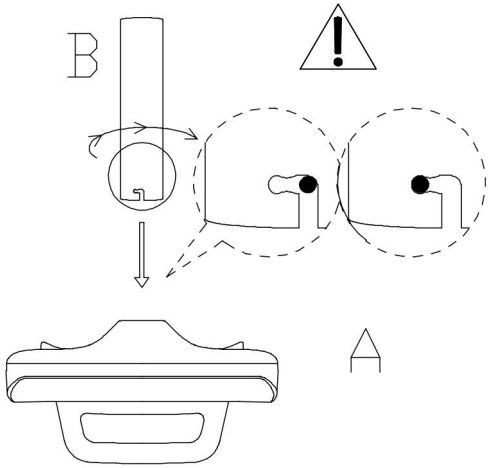

STEG 5

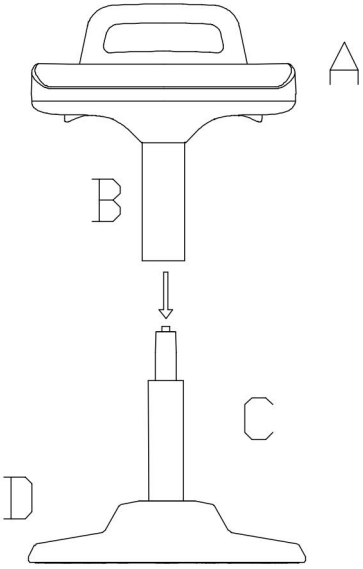

USER INSTRUCTIONS

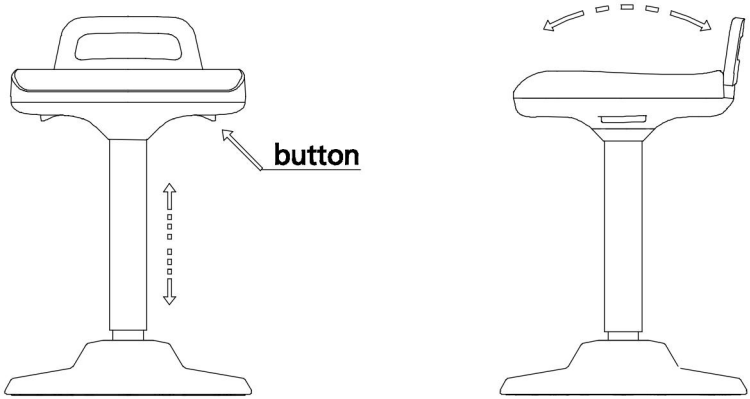

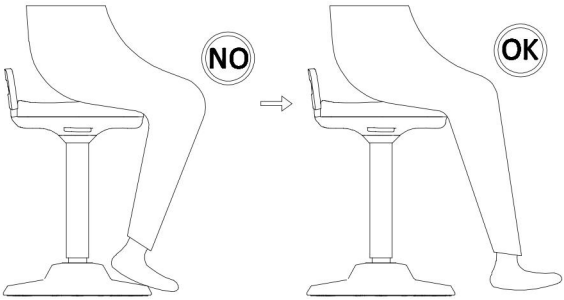

Varning: LUTA INTE BAKÅT! Luta inte den vinglade pallen våldsamt bortom det vertikala läget för att minimera risken att falla.
Varning: Använd inte pallen med bara en fot eller utan några fötter på marken.

COMPLETION

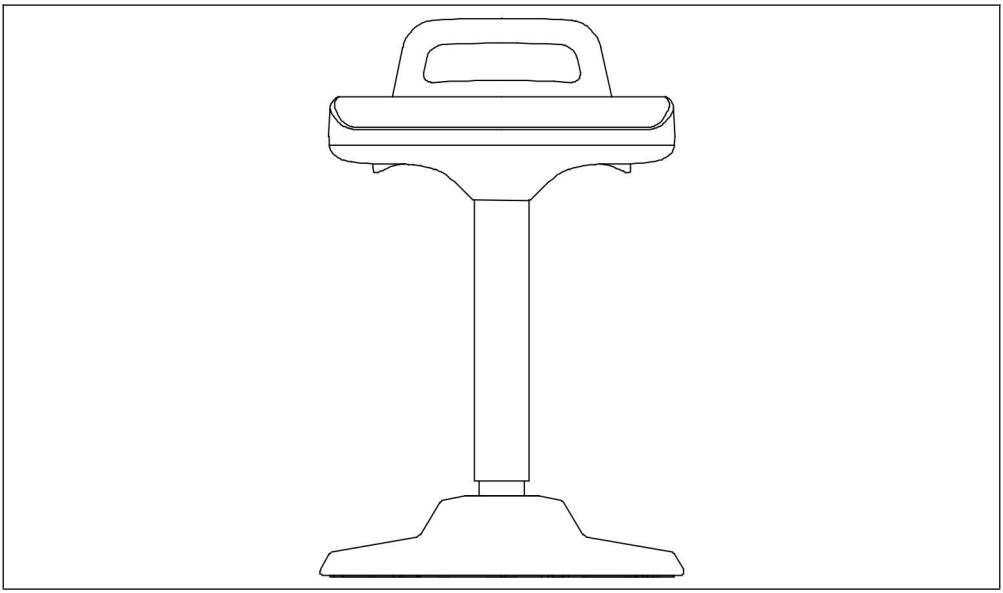

Tillverkare: Shanghaimuxinmuyeyouxiangongsi
Adress: Shuangchenglu 803nong11hao1602A-1609shi, baoshanqu, shanghai 200000 CN.
Importerad till AUS: SIHAO PTY LTD. 1 ROKEVA STREETEASTWOOD NSW 2122 Australien
Importerad till USA: Sanven Technology Ltd. Suite 250, 9166 Anaheim Place, Rancho Cucamonga, CA 91730

EC	REP

E-CrossStu GmbH
Mainzer Landstr.69, 60329 Frankfurt am Main.

UK	REP

YH CONSULTING LIMITED.
C/O YH Consulting Limited Office 147, Centurion House, London Road, Staines-upon-Thames, Surrey, TW18 4AX

VEVOR®

TOUGH TOOLS, HALF PRICE

Teknisk Support och e-garanticertifikat

www.vevor.com/support