VEVOR®

TOUGH TOOLS, HALF PRICE

Technical Support and E-Warranty Certificate www.vevor.com/support

WATER JUG HOLDER

USER MANUAL

4 WATER BOTTLE RACK-S
4 WATER BOTTLE RACK-B

We continue to be committed to provide you tools with competitive price.
"Save Half", "Half Price" or any other similar expressions used by us only represents an estimate of savings you might benefit from buying certain tools with us compared to the major top brands and does not necessarily mean to cover all categories of tools offered by us. You are kindly reminded to verify carefully when you are placing an order with us if you are actually saving half in comparison with the top major brands.

VEVOR®

TOUGH TOOLS, HALF PRICE

WATER JUG HOLDER

MODEL:4 WATER BOTTLE RACK-S,4 WATER BOTTLE RACK-B

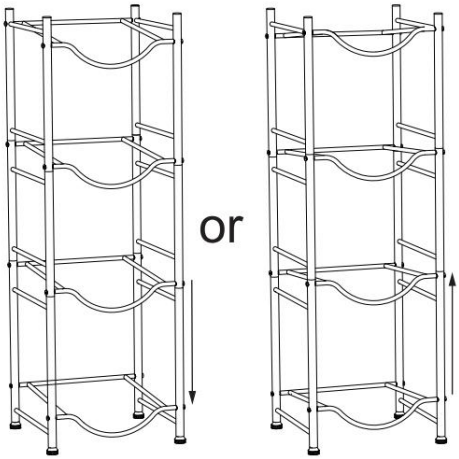

Downtilt Uptilt

NEED HELP? CONTACT US!

Have product questions? Need technical support? Please feel free to contact us:

Technical Support and E-Warranty Certificate
www.vevor.com/support

This is the original instruction, please read all manual instructions carefully before operating. VEVOR reserves a clear interpretation of our user manual. The appearance of the product shall be subject to the product you received. Please forgive us that we won't inform you again if there are any technology or software updates on our product.

SAFETY INSTRUCTIONS

WARNING:

Read this material before using this product. Failure to do so can result in serious injury.

Assembly precautions

1. Assemble only according to these instructions. Improper assembly can create hazards.
2. Wear ANSI-approved safety goggles and heavy-duty work gloves during assembly.
3. Keep the assembly area clean and well-lit.
4. Keep bystanders out of the area during assembly.
5. Do not assemble if tired or when under the influence of alcohol, drugs or medication.
6. The product capabilities apply to properly and completely assembled products only.
7. Assemble on a flat, level, hard and smooth surface capable of safely supporting the Water Jug Holder.
8. For additional information regarding the parts listed in the following pages, please refer to the Assembly Diagram of this manual. Unwrap and separate all parts in a clean work area.

Use precautions

1. DO NOT SIT OR STAND ON THIS ITEM.
2. This product is not a toy. Do not allow children to play with or near it.
3. Do not exceed specified weight capacities.
4. Use only on a flat, level, hard and smooth surface that can safely support a fully loaded Water Jug Holder.
5. Use as intended only.
6. Inspect before every use; do not use if parts are loose or damaged.

SAVE THIS MANUAL

PARTS LIST

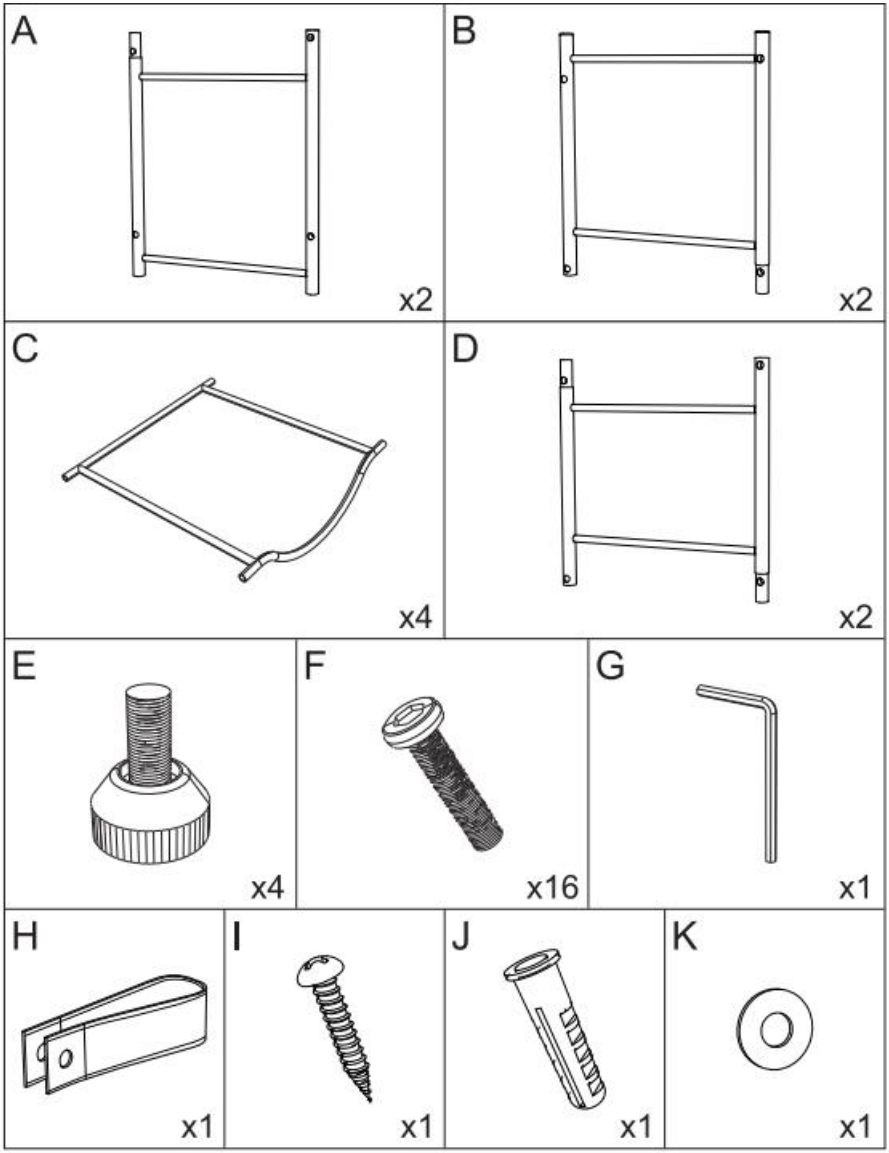

Two Installation Methods

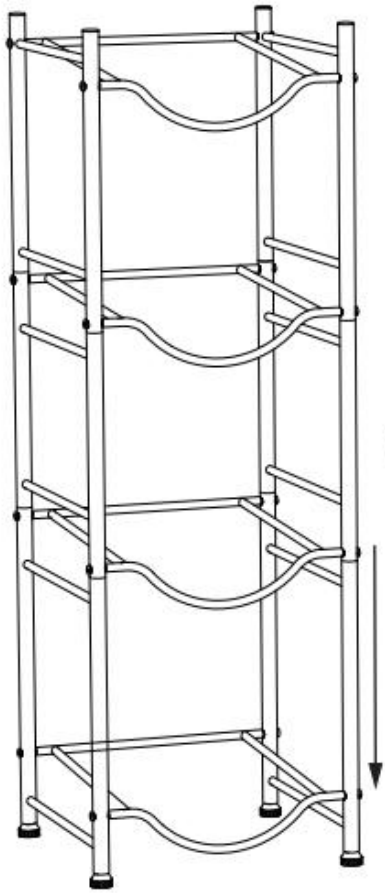

Downtilt

(To page 5,page 6,page 7)

or

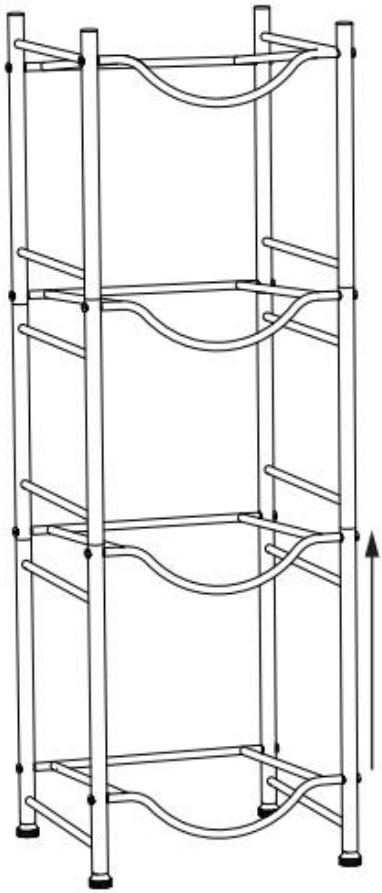

Uptilt

(To page 8,page 9,page 10)

Downtilt

STEP 1

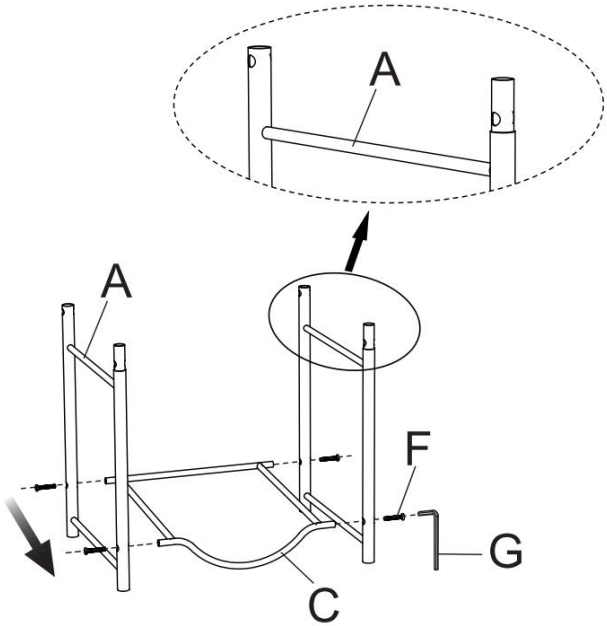

STEP 2

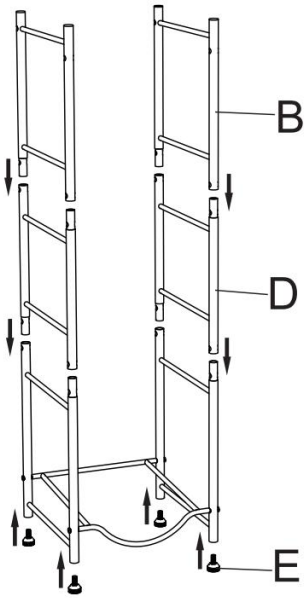

Downtilt

STEP 3

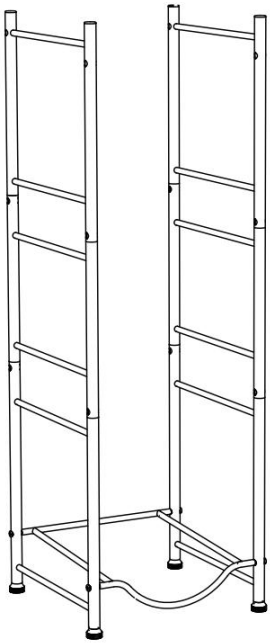

STEP 4

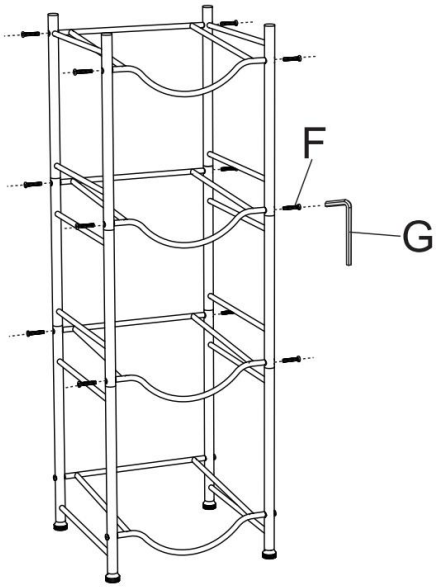

Downtilt
STEP 5

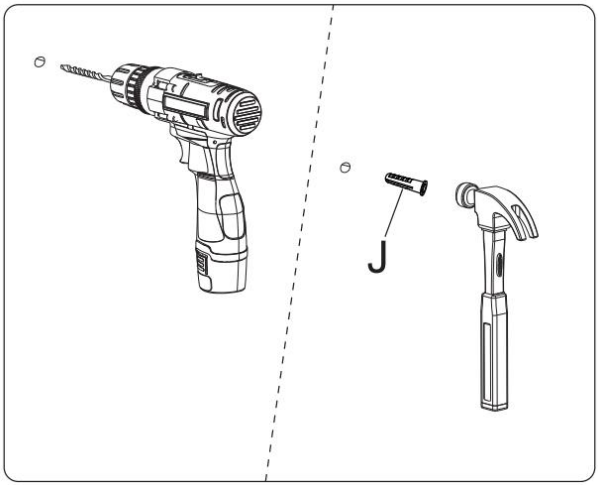

Drill holes in the wall according to the specified distances, and install the provided wall anchors into the holes.

STEP 6

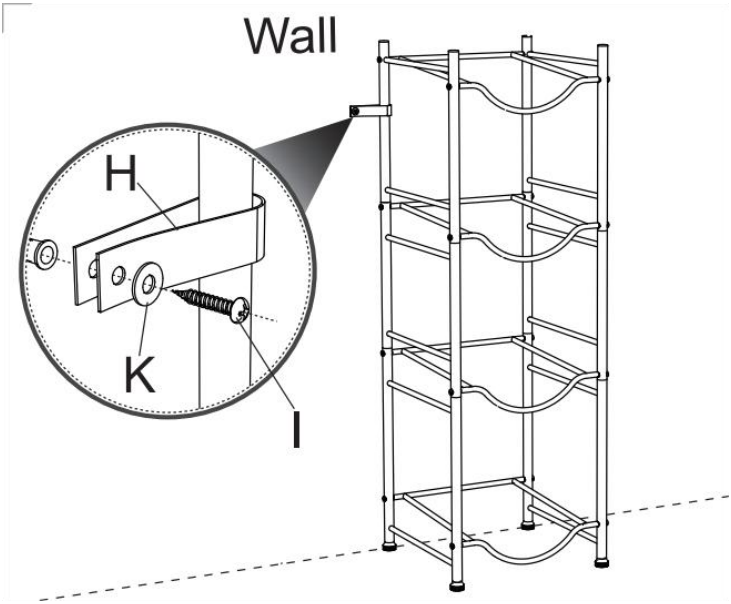

Uptilt

STEP 1

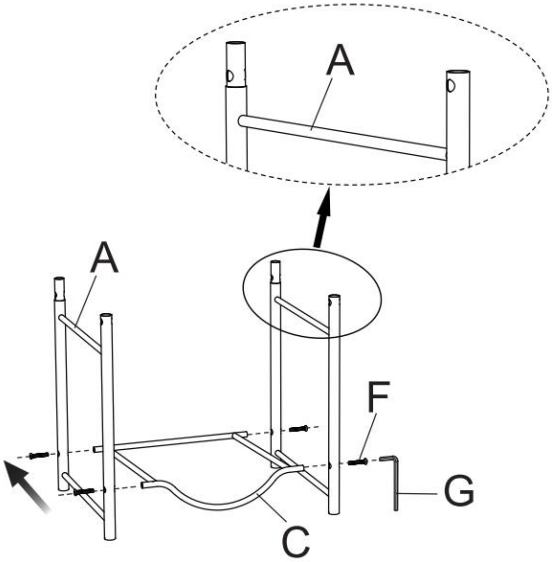

STEP 2

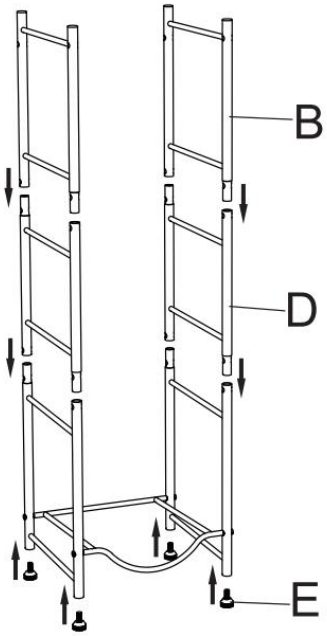

Uptilt

STEP 3

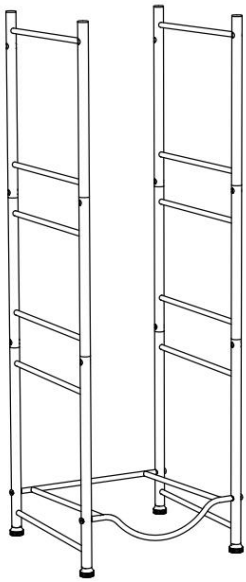

STEP 4

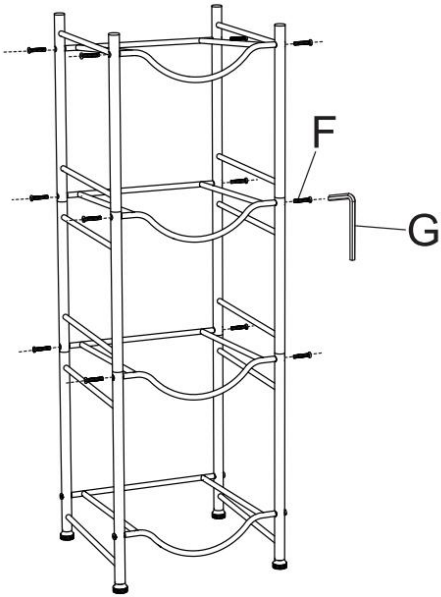

Uptilt
STEP 5

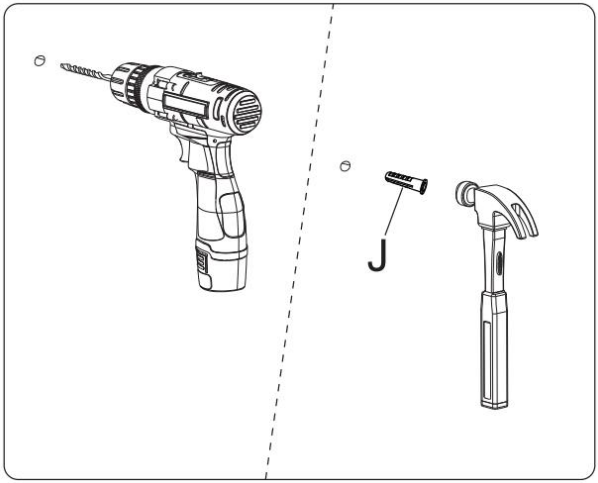

Drill holes in the wall according to the specified distances, and install the provided wall anchors into the holes.

STEP 6

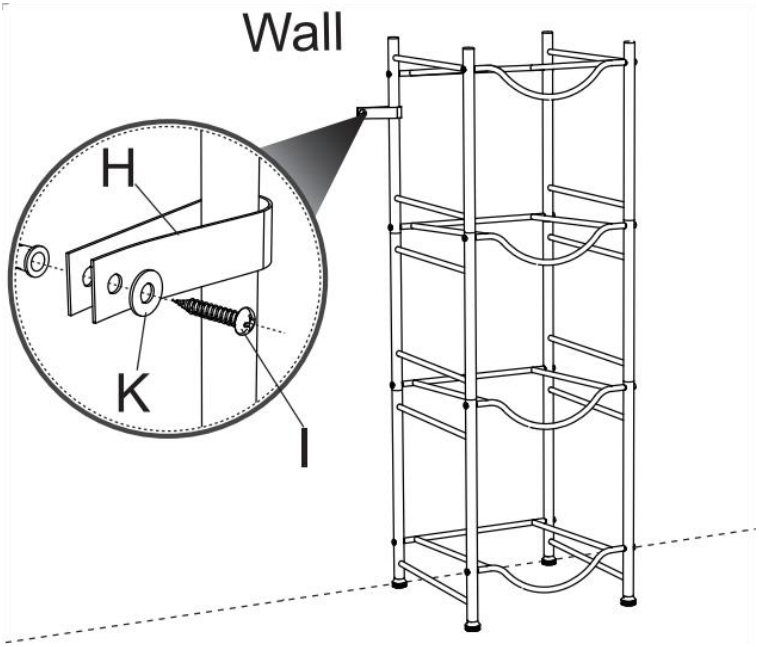

PRODUCT PARAMETER

Model	**4 Water Bottle Rack-S**	**4 Water Bottle Rack-B**
Colour	Silver	Black
Safe Loading Weight	4 x Water Bucket (19kg)	
Capacity	4	
Product Size	332*330*1047mm	

Manufacturer: Shanghaimuxinmuyeyouxiangongsi
Address: Shuangchenglu 803nong11hao1602A-1609shi, baoshanqu, shanghai 200000 CN.
Imported to AUS: SIHAO PTY LTD. 1 ROKEVA STREETEASTWOOD NSW 2122 Australia
Imported to USA: Sanven Technology Ltd. Suite 250, 9166 Anaheim Place, Rancho Cucamonga, CA 91730

EC RE

E-CrossStu GmbH
Mainzer Landstr.69, 60329 Frankfurt am Main.

UK RE

YH CONSULTING LIMITED.
C/O YH Consulting Limited Office 147, Centurion House, London Road, Staines-upon-Thames, Surrey, TW18 4AX

VEVOR®

TOUGH TOOLS, HALF PRICE

Technical Support and E-Warranty Certificate

www.vevor.com/support

VEVOR®

TOUGH TOOLS, HALF PRICE

Techniczny Certyfikat wsparcia i e-gwarancji www.vevor.com/support

UCHWYT NA DZBANEK NA WODĘ

INSTRUKCJA obsługi

4 STOJAK NA BUTELKI Z WODĄ-S
4 STOJAK NA BUTELKI Z WODĄ – B

We continue to be committed to provide you tools with competitive price.
"Save Half", "Half Price" or any other similar expressions used by us only represents an estimate of savings you might benefit from buying certain tools with us compared to the major top brands and does not necessarily mean to cover all categories of tools offered by us. You are kindly reminded to verify carefully when you are placing an order with us if you are actually saving half in comparison with the top major brands.

VEVOR®

TOUGH TOOLS, HALF PRICE

WATER JUG HOLDER

MODEL: 4 STOJAKI NA BUTELKI Z WODĄ-S , 4 STOJAKI NA BUTELKI Z WODĄ-B

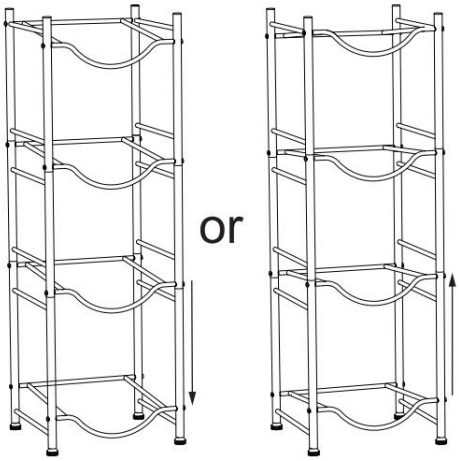

Downtilt Uptilt

NEED HELP? CONTACT US!

Have product questions? Need technical support? Please feel free to contact us:

Technical Support and E-Warranty Certificate
www.vevor.com/support

This is the original instruction, please read all manual instructions carefully before operating. VEVOR reserves a clear interpretation of our user manual. The appearance of the product shall be subject to the product you received. Please forgive us that we won't inform you again if there are any technology or software updates on our product.

SAFETY INSTRUCTIONS

OSTRZEŻENIE:

Przeczytaj ten materiał przed użyciem tego produktu. Niezastosowanie się do tego może spowodować poważne obrażenia.

Środki ostrożności podczas montażu

1. Montaż wyłącznie zgodnie z niniejszą instrukcją. Nieprawidłowy montaż może stworzyć zagrożenie.
2. Podczas montażu należy nosić okulary ochronne i wytrzymałe rękawice robocze zatwierdzone przez ANSI.
3. Utrzymuj miejsce zbiórki w czystości i dobrze oświetlone.
4. Podczas montażu trzymaj osoby postronne z dala od obszaru.
5. Nie montuj, jeśli jesteś zmęczony lub pod wpływem alkoholu, narkotyków lub leków.
6. Możliwości produktu dotyczą wyłącznie produktów prawidłowo i całkowicie zmontowanych.
7. Zmontuj na płaskiej, poziomej, twardej i gładkiej powierzchni, która może bezpiecznie utrzymać uchwyt na dzbanek na wodę.
8. Dodatkowe informacje dotyczące części wymienionych na kolejnych stronach można znaleźć w schemacie montażu w niniejszej instrukcji. Rozpakuj i oddziel wszystkie części w czystym miejscu pracy.

Stosuj środki ostrożności

1. NIE SIEDŹ ANI NIE STAJ NA TYM PRZEDMIOCIE.
2. Ten produkt nie jest zabawką. Nie pozwalaj dzieciom bawić się z nim lub w jego pobliżu .
3. Nie przekraczaj podanego pojemności wagowe.
4. Używaj wyłącznie na płaskiej, równej, twardej i gładkiej powierzchni, która może bezpiecznie utrzymać w pełni naładowany uchwyt na dzbanek na wodę.
5. Używaj wyłącznie zgodnie z przeznaczeniem.
6. Sprawdź przed każdym użyciem; nie używać, jeśli części są luźne lub uszkodzone.

ZACHOWAJ TĘ INSTRUKCJĘ

PARTS LIST

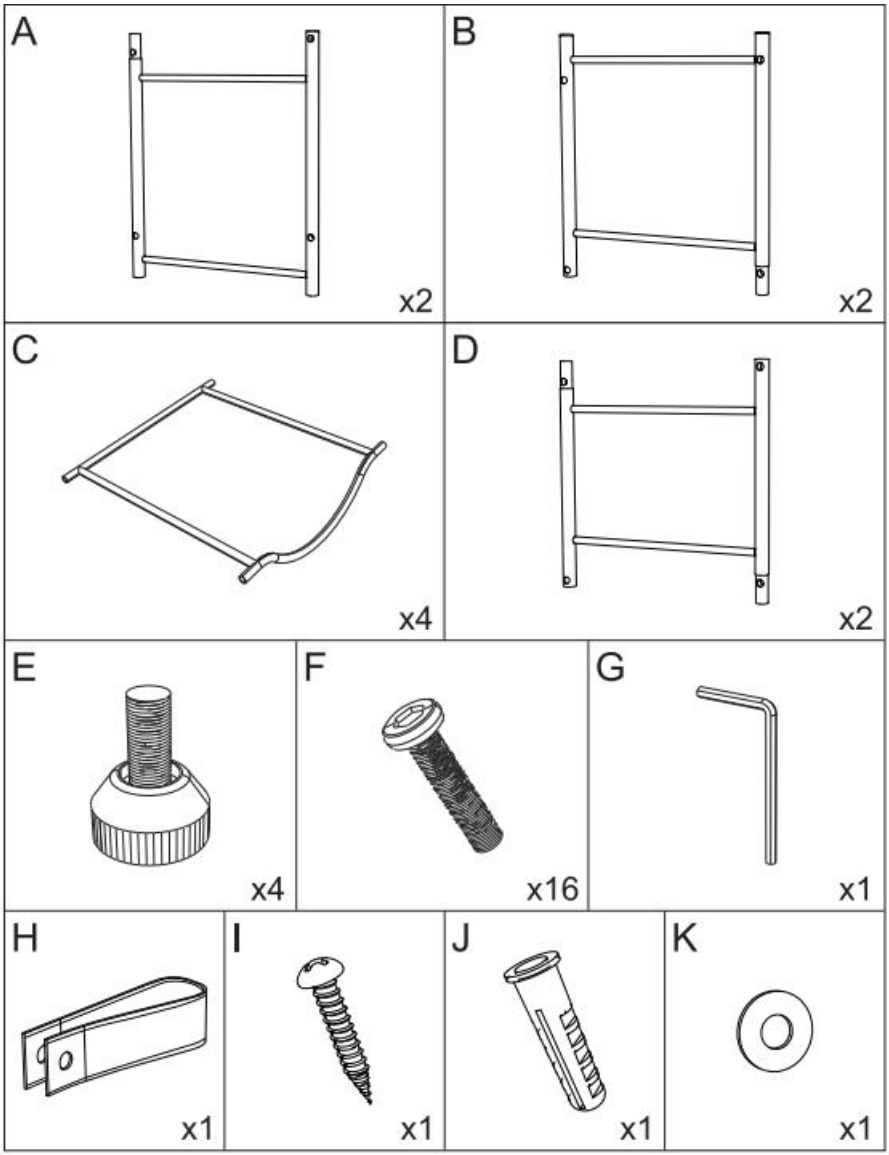

Dwie metody instalacji

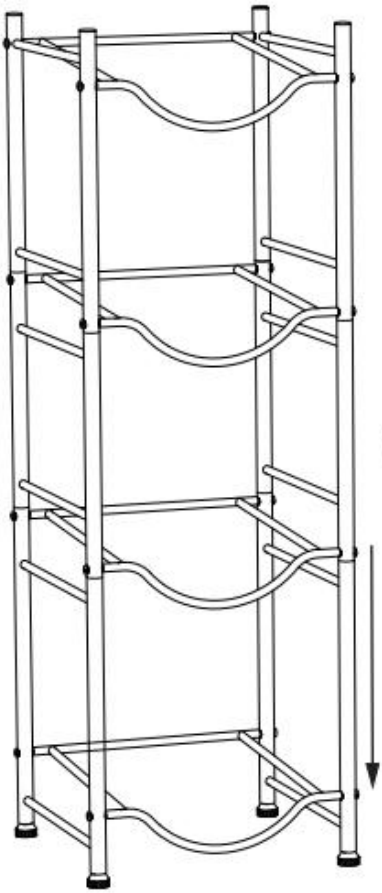

Downtilt

(To page 5,page 6,page 7)

or

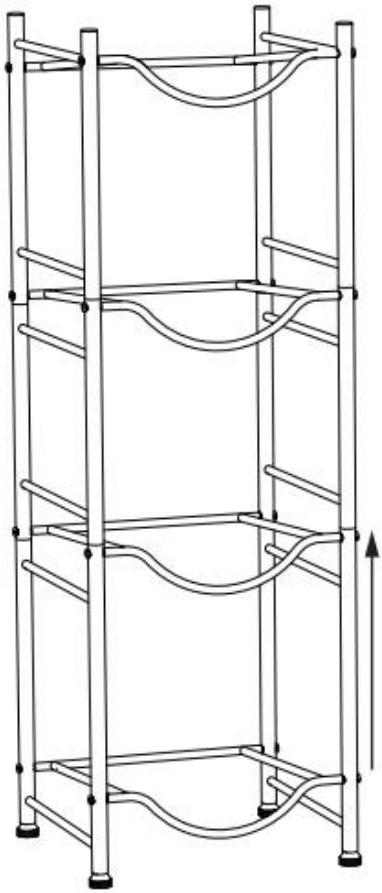

Uptilt

(To page 8,page 9,page 10)

Pochylenie w dół

KROK 1

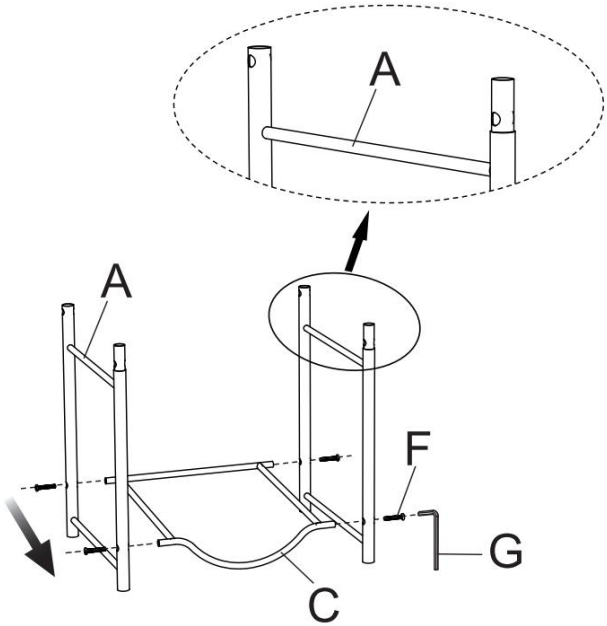

KROK 2

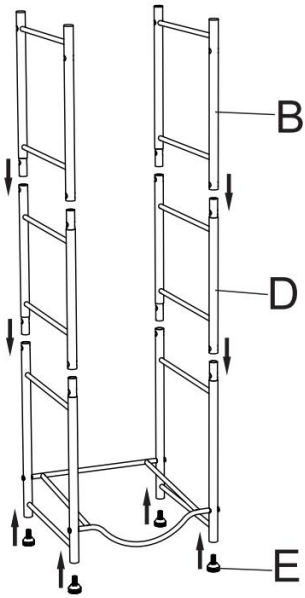

Pochylenie w dół

KROK 3

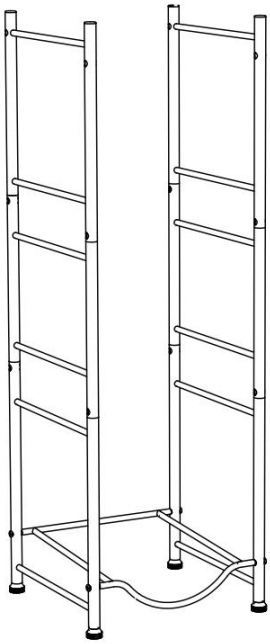

KROK 4

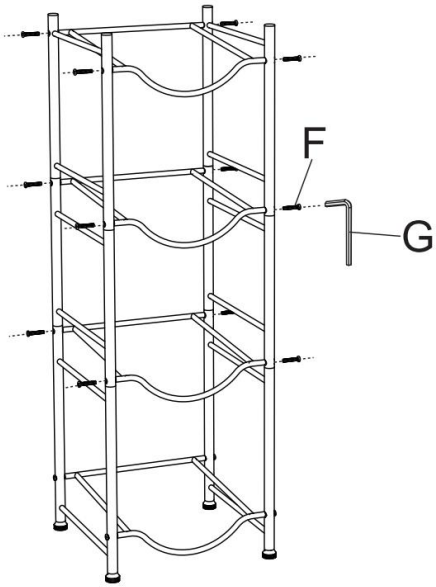

Pochylenie w dół

KROK 5

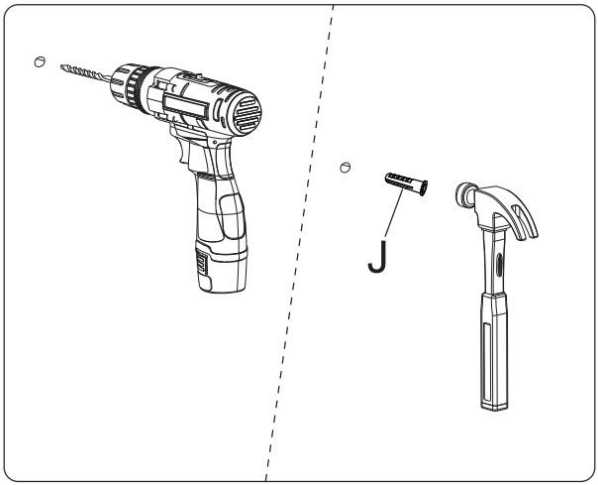

Drill holes in the wall according to the specified distances, and install the provided wall anchors into the holes.

KROK 6

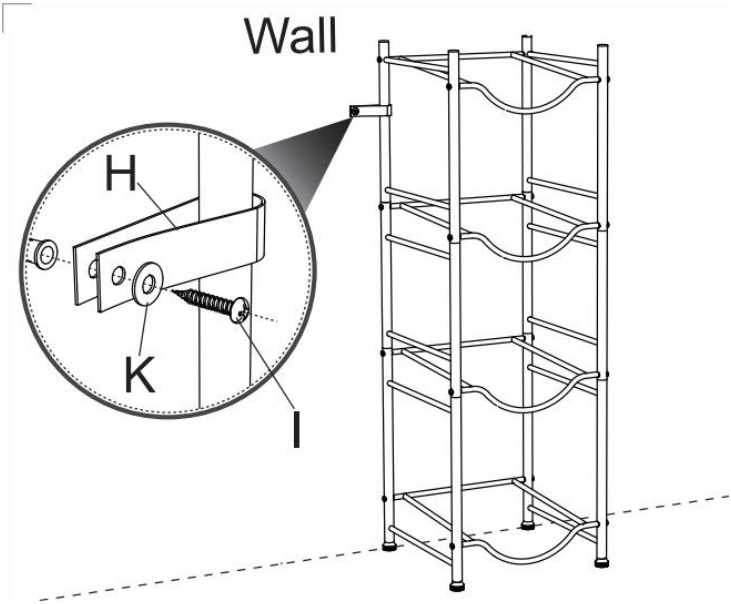

Podwyższenie

KROK 1

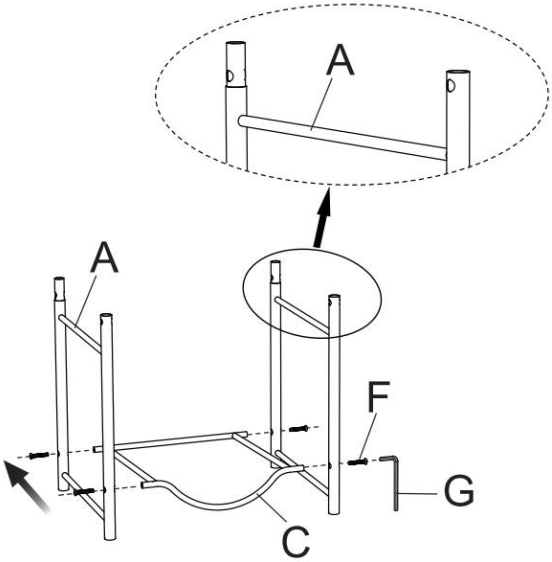

KROK 2

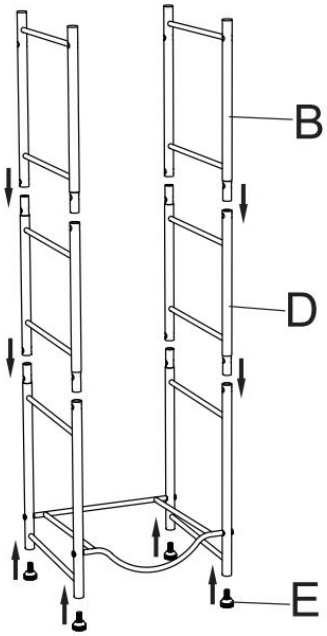

Podwyższenie

KROK 3

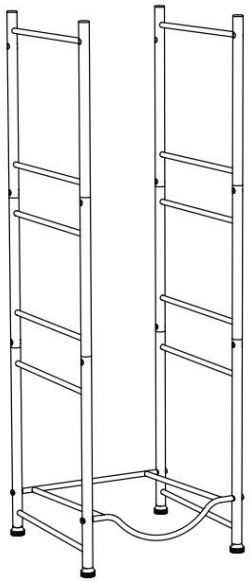

KROK 4

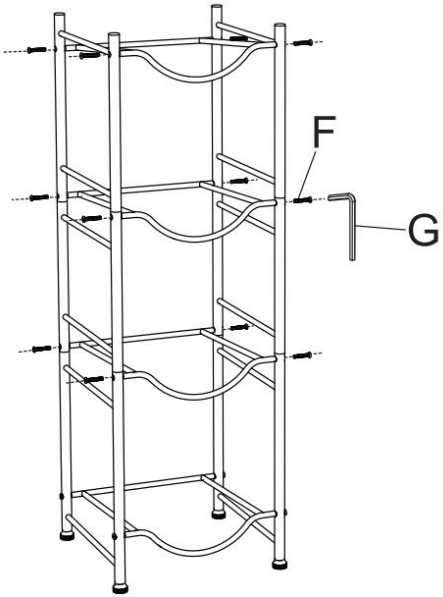

Podwyższenie

KROK 5

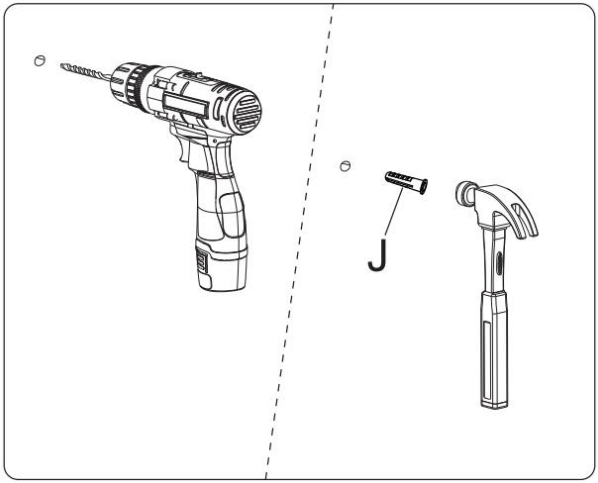

Drill holes in the wall according to the specified distances, and install the provided wall anchors into the holes.

KROK 6

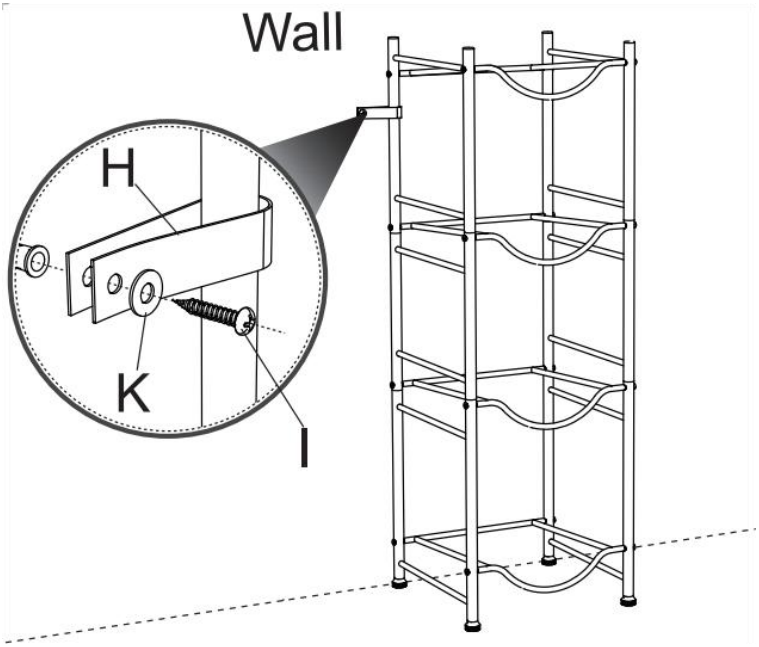

PRODUCT PARAMETER

Model	**4 Stojak na butelki z wodą-S**	**4 Stojak na butelki z wodą – B**
Kolor	Srebro	Czarny
Bezpieczna waga załadunku	4 x wiadro na wodę (19kg)	
Pojemność	4	
Rozmiar produktu	332*330*1047mm	

Producent: Shanghaimuxinmuyeyouxiangongsi
Adres: Shuangchenglu 803nong11hao1602A-1609shi, baoshanqu, szanghaj 200000 CN.
Import do AUS: SIHAO PTY LTD. 1 ROKEVA STREETEASTWOOD NSW 2122 Australia
Import do USA: Sanven Technology Ltd. Suite 250, 9166 Anaheim Place, Rancho Cucamonga, CA 91730

EC RE

E-CrossStu GmbH
Mainzer Landstr.69, 60329 Frankfurt am Main.

UK RE

YH CONSULTING LIMITED.
C/O YH Consulting Limited Office 147, Centurion House, London Road, Staines-upon-Thames, Surrey, TW18 4AX

VEVOR®

TOUGH TOOLS, HALF PRICE

Techniczny Certyfikat wsparcia i e-gwarancji

www.vevor.com/support

VEVOR®

TOUGH TOOLS, HALF PRICE

Technisch Support und E-Garantie-Zertifikat www.vevor.com/support

WASSERKRUGHALTER

Benutzerhandbuch

4 WASSERFLASCHENHALTER-S

4 WASSERFLASCHENHALTER-B

We continue to be committed to provide you tools with competitive price.
"Save Half", "Half Price" or any other similar expressions used by us only represents an estimate of savings you might benefit from buying certain tools with us compared to the major top brands and does not necessarily mean to cover all categories of tools offered by us. You are kindly reminded to verify carefully when you are placing an order with us if you are actually saving half in comparison with the top major brands.

VEVOR®

TOUGH TOOLS, HALF PRICE

WATER JUG HOLDER

MODELL: 4 WASSERFLASCHENSTÄNDER-S , 4 WASSERFLASCHENSTÄNDER-B

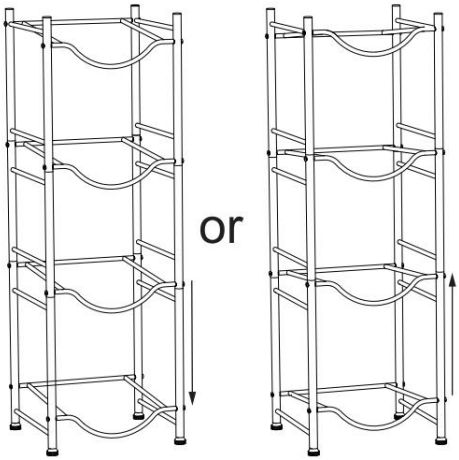

Downtilt Uptilt

NEED HELP? CONTACT US!

Have product questions? Need technical support? Please feel free to contact us:

Technical Support and E-Warranty Certificate
www.vevor.com/support

This is the original instruction, please read all manual instructions carefully before operating. VEVOR reserves a clear interpretation of our user manual. The appearance of the product shall be subject to the product you received. Please forgive us that we won't inform you again if there are any technology or software updates on our product.

SAFETY INSTRUCTIONS

WARNUNG:

Lesen Sie dieses Material, bevor Sie dieses Produkt verwenden. Andernfalls kann es zu schweren Verletzungen kommen.

Vorsichtsmaßnahmen bei der Montage

1. Führen Sie die Montage nur gemäß dieser Anleitung durch. Eine unsachgemäße Montage kann zu Gefahren führen.
2. Tragen Sie während der Montage eine ANSI-geprüfte Schutzbrille und robuste Arbeitshandschuhe.
3. Halten Sie den Versammlungsbereich sauber und gut beleuchtet.
4. Halten Sie während der Montage unbeteiligte Zuschauer vom Bereich fern.
5. Nicht zusammenbauen, wenn Sie müde sind oder unter Einfluss von Alkohol, Drogen oder Medikamenten stehen.
6. Die Produktfunktionen gelten nur für ordnungsgemäß und vollständig montierte Produkte.
7. Montieren Sie es auf einer flachen, ebenen, harten und glatten Oberfläche, auf der der Wasserkrughalter sicher stehen kann.
8. Weitere Informationen zu den auf den folgenden Seiten aufgeführten Teilen finden Sie im Montagediagramm dieses Handbuchs. Packen Sie alle Teile in einem sauberen Arbeitsbereich aus und trennen Sie sie.

Vorsichtsmaßnahmen treffen

1. SETZEN ODER STELLEN SIE SICH NICHT AUF DIESEN GEGENSTAND.
2. Dieses Produkt ist kein Spielzeug. Erlauben Sie Kindern nicht, damit oder in der Nähe des Produkts zu spielen .
3. Sie nicht die angegebenen Gewichtskapazitäten.
4. Nur auf einer flachen, ebenen, harten und glatten Oberfläche verwenden, die einen voll beladenen Wasserkrughalter sicher tragen kann.
5. Nur bestimmungsgemäß verwenden.
6. Vor jedem Gebrauch prüfen; nicht verwenden, wenn Teile lose oder

beschädigt sind.

BEWAHREN SIE DIESES HANDBUCH AUF

PARTS LIST

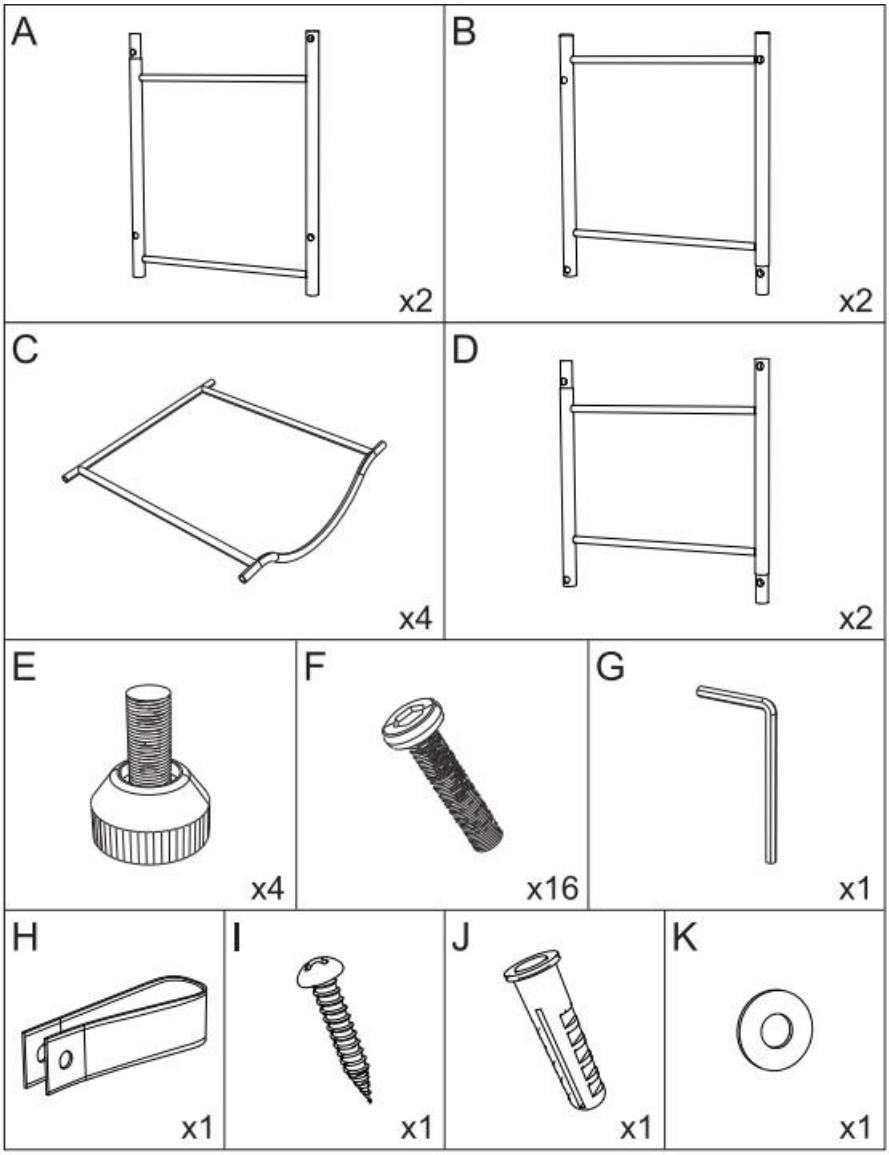

Zwei Installationsmethoden

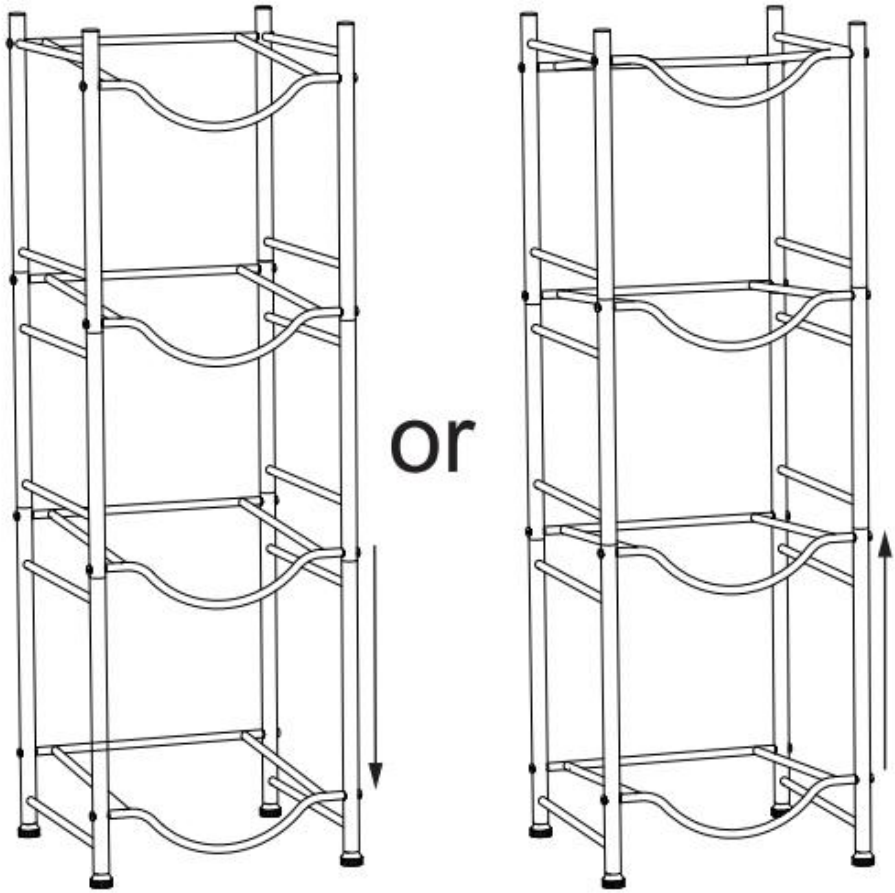

Downtilt

(To page 5,page 6,page 7)

Uptilt

(To page 8,page 9,page 10)

Abwärtsneigung

SCHRITT 1

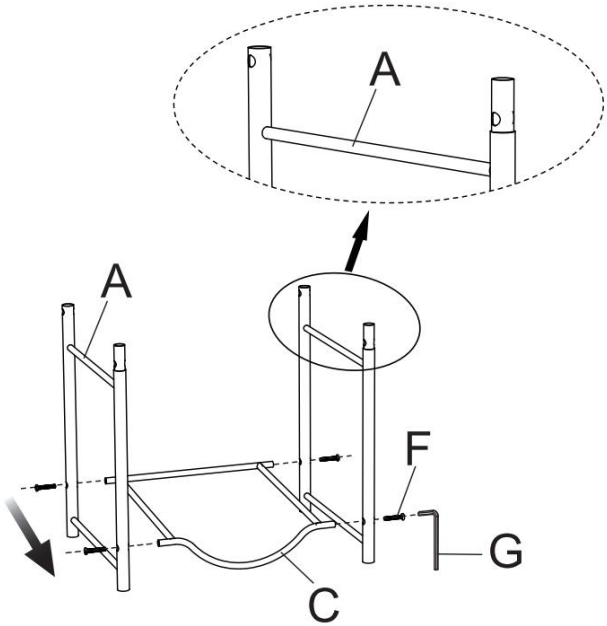

SCHRITT 2

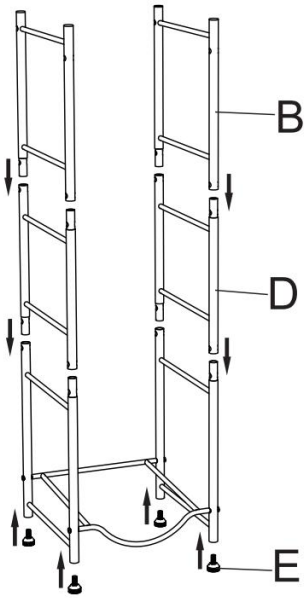

Abwärtsneigung

SCHRITT 3

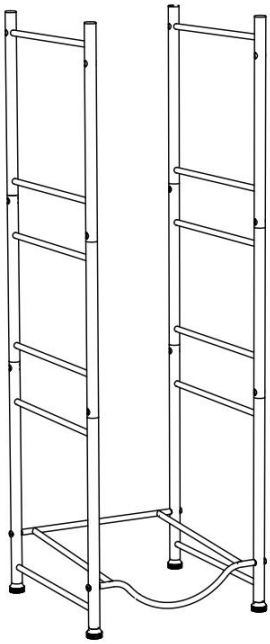

SCHRITT 4

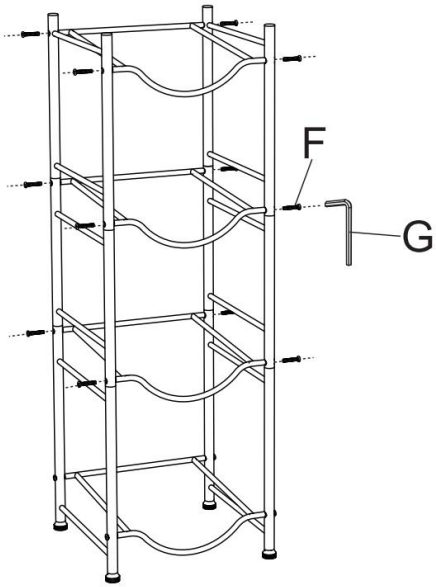

Abwärtsneigung

SCHRITT 5

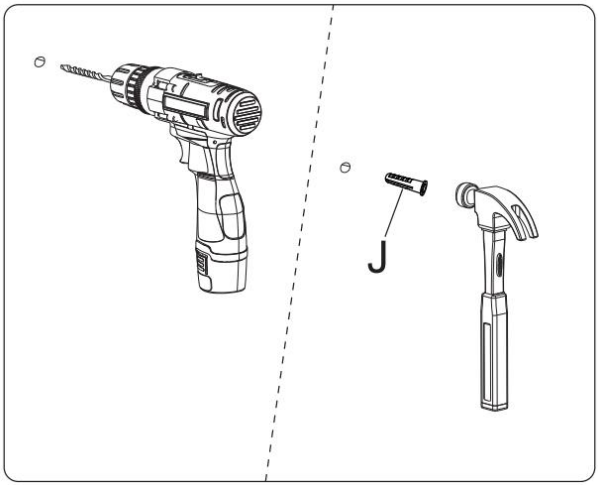

Drill holes in the wall according to the specified distances, and install the provided wall anchors into the holes.

SCHRITT 6

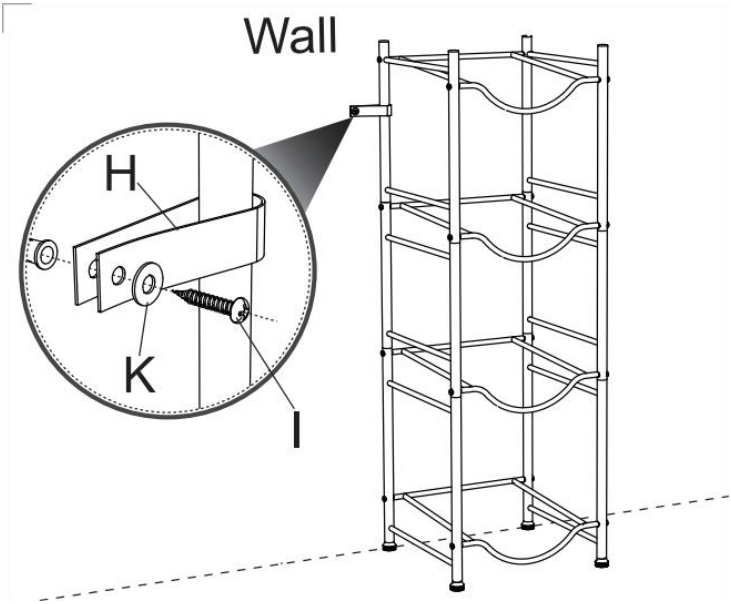

Aufwärtsneigung

SCHRITT 1

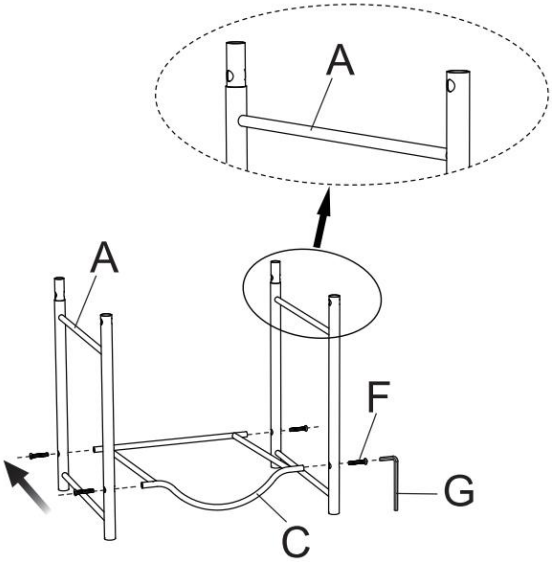

SCHRITT 2

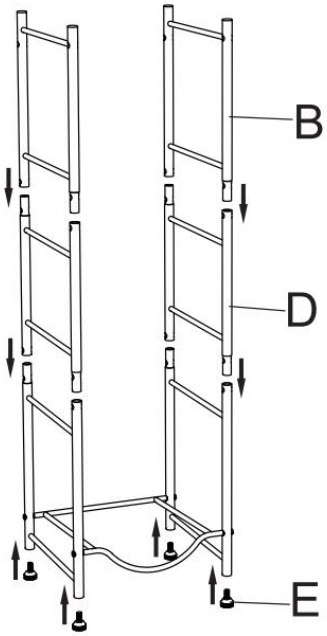

Aufwärtsneigung

SCHRITT 3

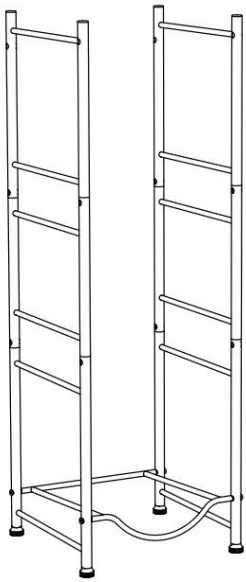

SCHRITT 4

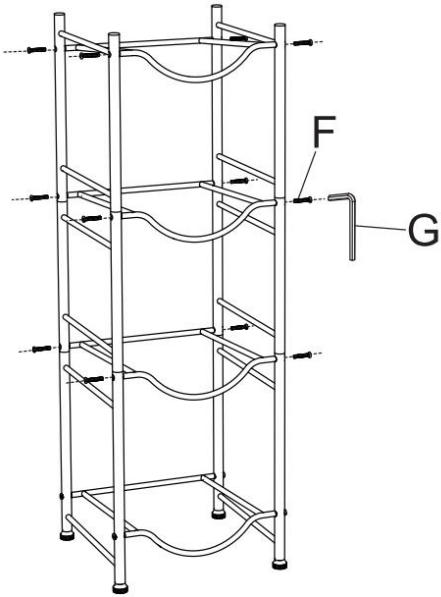

Aufwärtsneigung

SCHRITT 5

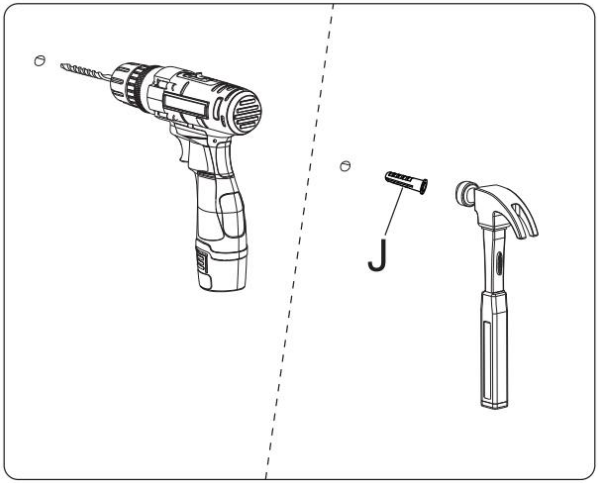

Drill holes in the wall according to the specified distances, and install the provided wall anchors into the holes.

SCHRITT 6

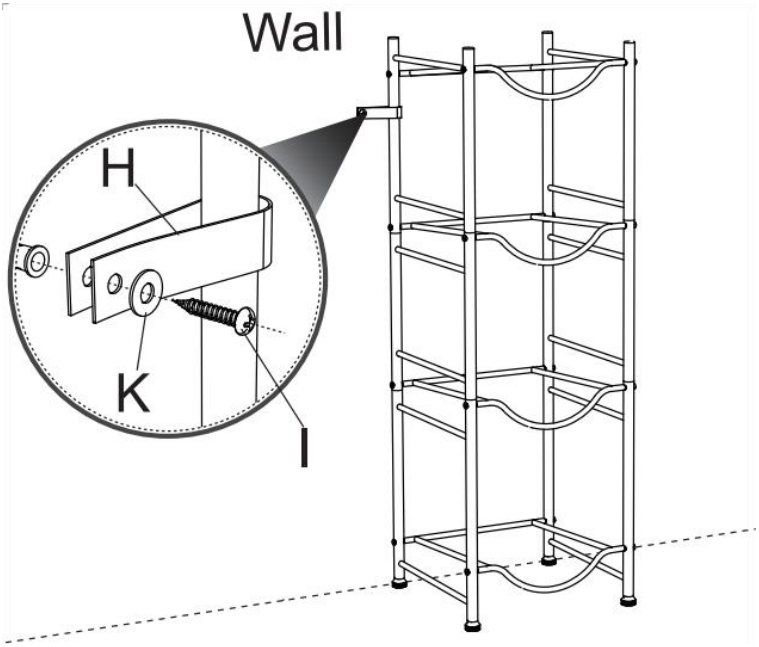

PRODUCT PARAMETER

Modell	**4 Wasserflaschenhalter-S**	**4 Wasserflaschenhalter-B**
Farbe	Silber	Schwarz
Sicheres Ladegewicht	4 x Wassereimer (19kg)	
Kapazität	4	
Produktgröße	332*330*1047 mm	

Hersteller: Shanghaimuxinmuyeyouxiangongsi
Adresse: Shuangchenglu 803nong11hao1602A-1609shi, Baoshanqu, Shanghai 200000 CN.
Nach AUS importiert: SIHAO PTY LTD. 1 ROKEVA STREETEASTWOOD NSW 2122 Australien
Importiert in die USA: Sanven Technology Ltd. Suite 250, 9166 Anaheim Place, Rancho Cucamonga, CA 91730

EC RE

E-CrossStu GmbH
Mainzer Landstr.69, 60329 Frankfurt am Main.

UK RE

YH CONSULTING LIMITED.
C/O YH Consulting Limited Office 147, Centurion House, London Road, Staines-upon-Thames, Surrey, TW18 4AX

VEVOR®

TOUGH TOOLS, HALF PRICE

Technisch Support und E-Garantie-Zertifikat

www.vevor.com/support

VEVOR®

TOUGH TOOLS, HALF PRICE

Technique Assistance et certificat de garantie électronique

www.vevor.com/support

PORTE-CRUCHE D'EAU

MANUEL DE l' Utilisateur

SUPPORT POUR 4 BOUTEILLES D'EAU-S
SUPPORT POUR 4 BOUTEILLES D'EAU-B

We continue to be committed to provide you tools with competitive price.
"Save Half", "Half Price" or any other similar expressions used by us only represents an estimate of savings you might benefit from buying certain tools with us compared to the major top brands and does not necessarily mean to cover all categories of tools offered by us. You are kindly reminded to verify carefully when you are placing an order with us if you are actually saving half in comparison with the top major brands.

VEVOR®

TOUGH TOOLS, HALF PRICE

WATER JUG HOLDER

MODÈLE : SUPPORT POUR 4 BOUTEILLES D'EAU-S , SUPPORT POUR 4 BOUTEILLES D'EAU-B.

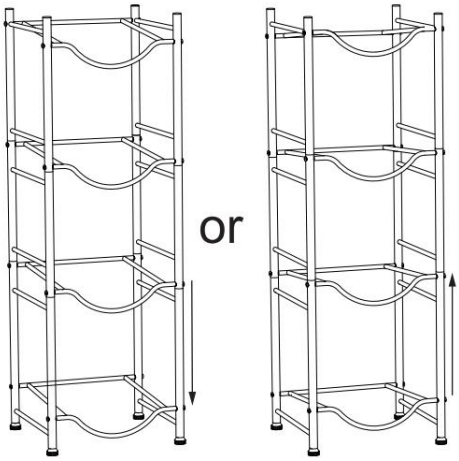

Downtilt Uptilt

NEED HELP? CONTACT US!

Have product questions? Need technical support? Please feel free to contact us:

Technical Support and E-Warranty Certificate
www.vevor.com/support

This is the original instruction, please read all manual instructions carefully before operating. VEVOR reserves a clear interpretation of our user manual. The appearance of the product shall be subject to the product you received. Please forgive us that we won't inform you again if there are any technology or software updates on our product.

SAFETY INSTRUCTIONS

AVERTISSEMENT:

Lisez ce document avant d'utiliser ce produit. Ne pas le faire peut entraîner des blessures graves.

Précautions de montage

1. Assemblez uniquement selon ces instructions. Un assemblage incorrect peut créer des dangers.
2. Portez des lunettes de sécurité approuvées par l'ANSI et des gants de travail robustes pendant l'assemblage.
3. Gardez la zone de rassemblement propre et bien éclairée.
4. Gardez les spectateurs hors de la zone pendant l' assemblage.
5. Ne vous rassemblez pas si vous êtes fatigué ou sous l' influence de l' alcool, de drogues ou de médicaments.
6. Les capacités du produit s'appliquent uniquement aux produits correctement et complètement assemblés.
7. Assemblez-le sur une surface plane, nivelée, dure et lisse, capable de supporter en toute sécurité le support de carafe à eau.
8. Pour plus d'informations concernant les pièces répertoriées dans les pages suivantes, veuillez vous référer au schéma d'assemblage de ce manuel. Déballez et séparez toutes les pièces dans une zone de travail propre.

Utiliser des précautions

1. NE PAS ÊTRE ASSIS OU DEBOUT SUR CET ARTICLE.
2. Ce produit n'est pas un jouet. Ne laissez pas les enfants jouer avec ou à proximité .
3. Ne dépassez pas les spécifications capacités de poids.
4. Utiliser uniquement sur une surface plane, nivelée, dure et lisse pouvant supporter en toute sécurité un support de carafe à eau entièrement chargé.

5. Utiliser uniquement comme prévu.
6. Inspectez avant chaque utilisation ; ne pas utiliser si les pièces sont desserrées ou endommagées.

CONSERVEZ CE MANUEL

PARTS LIST

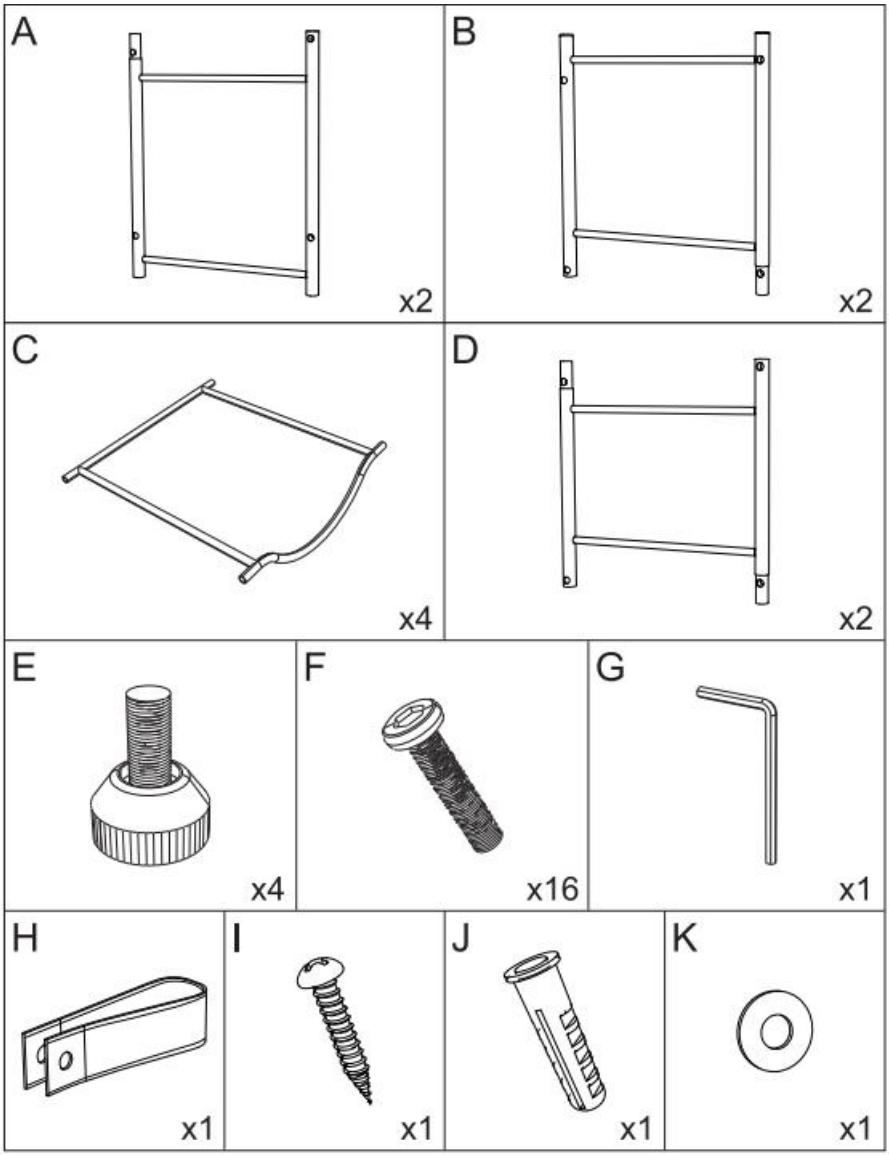
A
x2
B
x2
C
x4
D
x2
E
x4
F
x16
G
x1
H
x1
I
x1
J
x1
K
x1

Deux méthodes d'installation

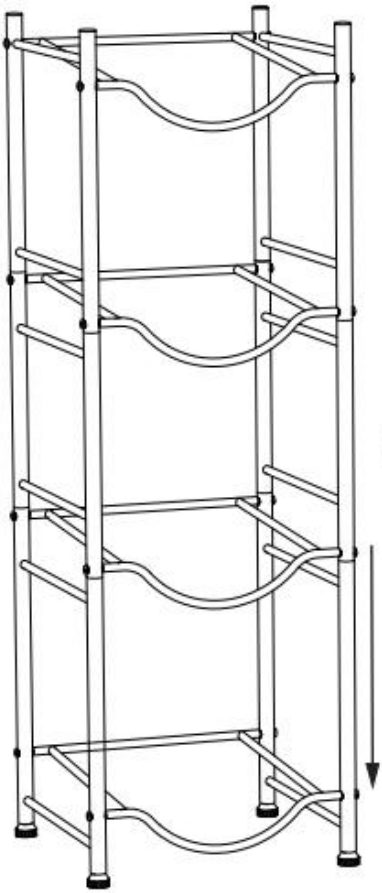

Downtilt

(To page 5,page 6,page 7)

or

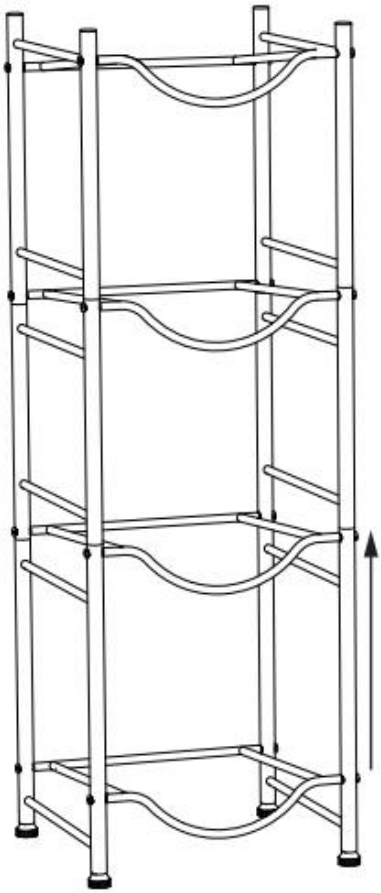

Uptilt

(To page 8,page 9,page 10)

Inclinaison vers le bas

ÉTAPE 1

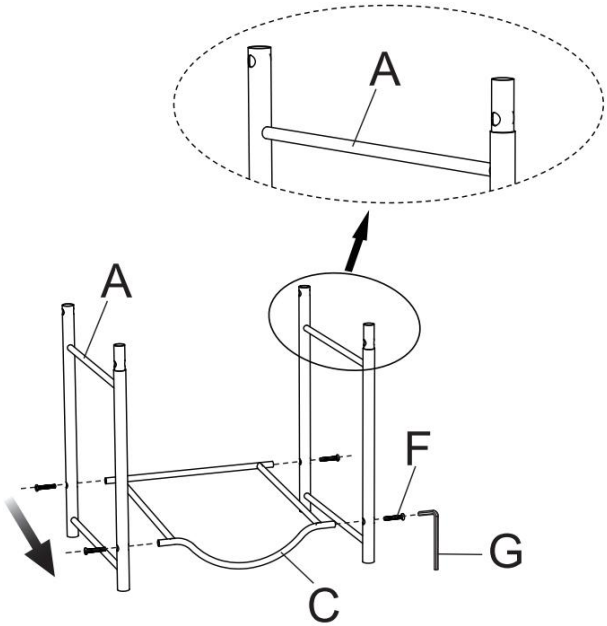

ÉTAPE 2

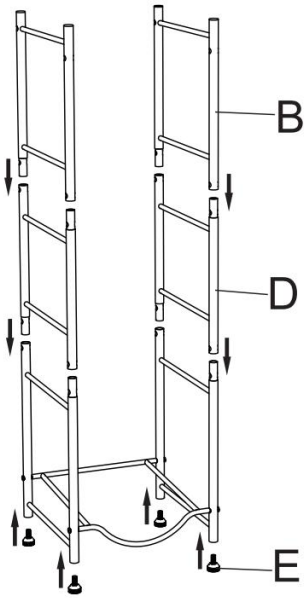

Inclinaison vers le bas

ÉTAPE 3

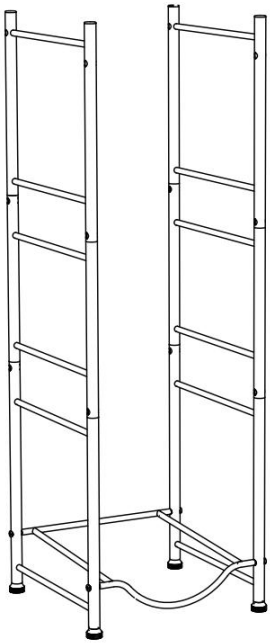

ÉTAPE 4

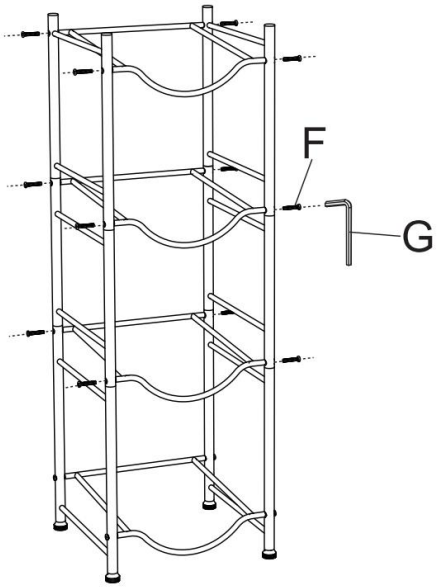

Inclinaison vers le bas

ÉTAPE 5

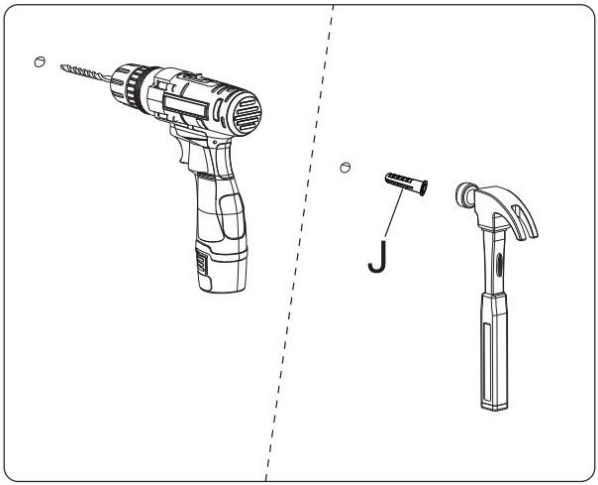

Drill holes in the wall according to the specified distances, and install the provided wall anchors into the holes.

ÉTAPE 6

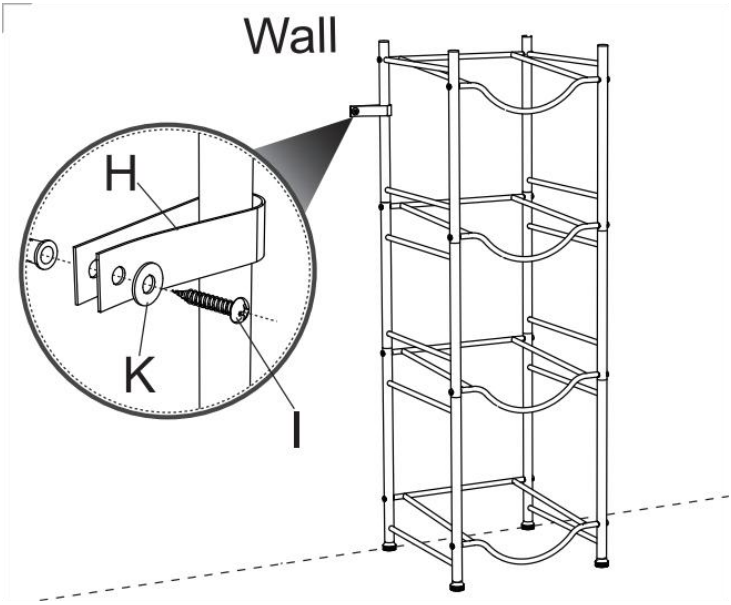

Inclinable
ÉTAPE 1 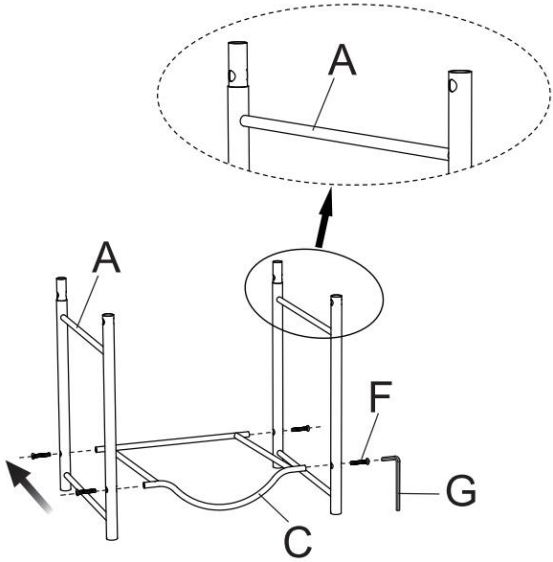
ÉTAPE 2 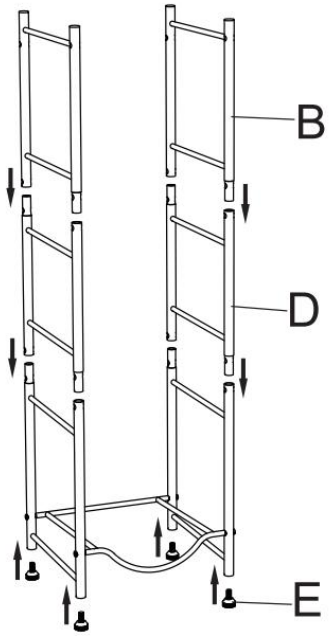

Inclinable
ÉTAPE 3 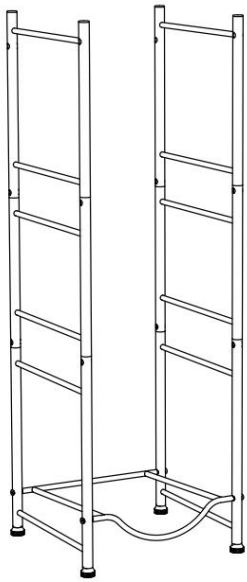
ÉTAPE 4 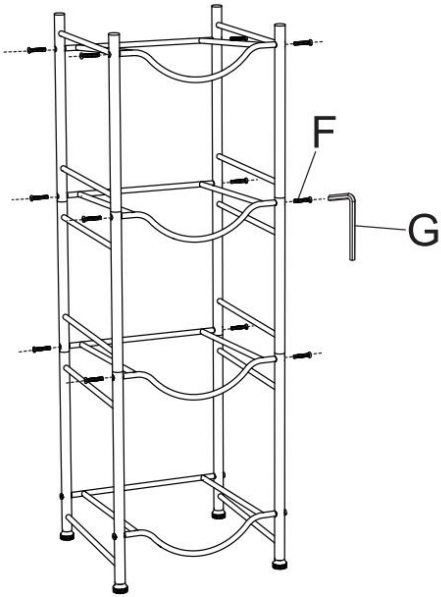

Inclinable

ÉTAPE 5

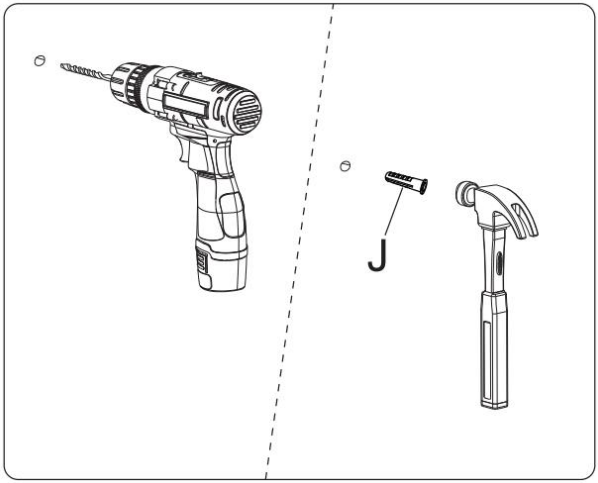

Drill holes in the wall according to the specified distances, and install the provided wall anchors into the holes.

ÉTAPE 6

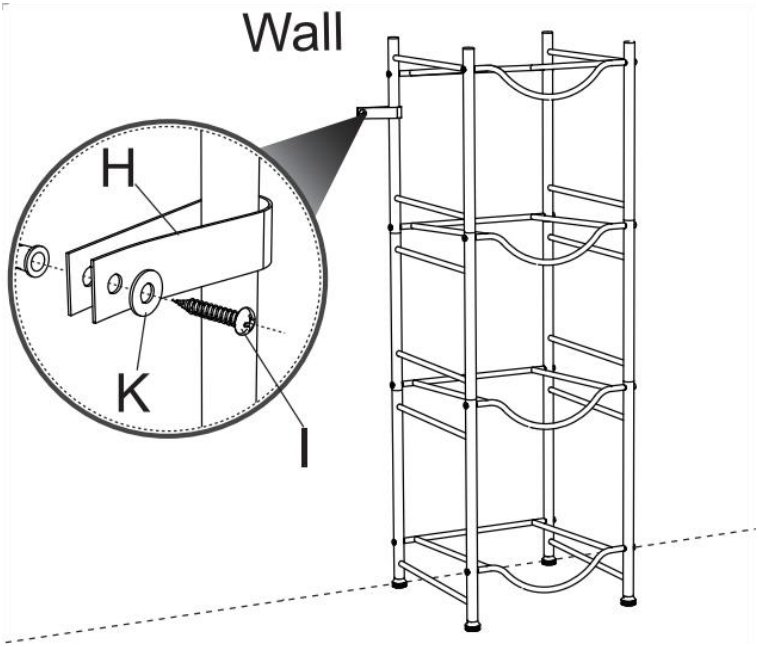

PRODUCT PARAMETER

Modèle	**Support pour 4 bouteilles d'eau-S**	**Support pour 4 bouteilles d'eau-B**
Couleur	Argent	Noir
Poids de chargement sûr	4 x seau à eau (19 kg)	
Capacité	4	
Taille du produit	332*330*1047mm	

Fabricant : Shanghaimuxinmuyeyouxiangongsi
Adresse : Shuangchenglu 803nong11hao1602A-1609shi, baoshanqu, Shanghai 200000 CN.
Importé en Australie : SIHAO PTY LTD. 1 ROKEVA STREETASTWOOD NSW 2122 Australie
Importé aux États-Unis : Sanven Technology Ltd. Suite 250, 9166 Anaheim Place, Rancho Cucamonga, CA 91730

EC RE

E-CrossStu GmbH
Mainzer Landstr.69, 60329 Frankfurt am Main.

UK RE

YH CONSULTING LIMITED.
C/O YH Consulting Limited Office 147, Centurion House, London Road, Staines-upon-Thames, Surrey, TW18 4AX

VEVOR®

TOUGH TOOLS, HALF PRICE

Technique Assistance et certificat de garantie électronique

www.vevor.com/support

VEVOR®

TOUGH TOOLS, HALF PRICE

Technisch Ondersteuning en e-garantiecertificaat www.vevor.com/support

HOUDER VOOR WATERKAN

Handleiding

4 BIDONREK-S

4 FLESSENREK-B

We continue to be committed to provide you tools with competitive price.
"Save Half", "Half Price" or any other similar expressions used by us only represents an estimate of savings you might benefit from buying certain tools with us compared to the major top brands and does not necessarily mean to cover all categories of tools offered by us. You are kindly reminded to verify carefully when you are placing an order with us if you are actually saving half in comparison with the top major brands.

VEVOR®

TOUGH TOOLS, HALF PRICE

WATER JUG HOLDER

MODEL: 4 FLESSENREK-S , 4 FLESSENREK-B

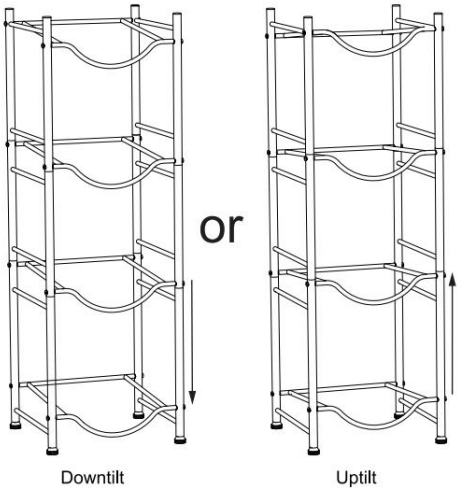

NEED HELP? CONTACT US!

Have product questions? Need technical support? Please feel free to contact us:

Technical Support and E-Warranty Certificate
www.vevor.com/support

This is the original instruction, please read all manual instructions carefully before operating. VEVOR reserves a clear interpretation of our user manual. The appearance of the product shall be subject to the product you received. Please forgive us that we won't inform you again if there are any technology or software updates on our product.

SAFETY INSTRUCTIONS

WAARSCHUWING:

Lees dit materiaal voordat u dit product gebruikt. Als u dit niet doet, kan dit leiden tot ernstig letsel.

Voorzorgsmaatregelen voor montage

1. Monteer uitsluitend volgens deze instructies. Onjuiste montage kan gevaren veroorzaken.
2. Draag tijdens de montage een ANSI-goedgekeurde veiligheidsbril en stevige werkhandschoenen.
3. Houd de verzamelplaats schoon en goed verlicht.
4. Houd omstanders tijdens de montage uit de buurt.
5. Niet monteren als u moe bent of onder invloed bent van alcohol, drugs of medicijnen.
6. De productmogelijkheden zijn alleen van toepassing op correct en volledig gemonteerde producten.
7. Monteer op een vlakke, vlakke, harde en gladde ondergrond die de waterkanhouder veilig kan ondersteunen.
8. Voor aanvullende informatie over de onderdelen die op de volgende pagina's worden vermeld, verwijzen wij u naar het montageschema van deze handleiding. Pak alle onderdelen uit en scheid ze van elkaar op een schone werkplek.

Gebruik voorzorgsmaatregelen

1. ZIT OF STA NIET OP DIT ITEM.
2. Dit product is geen speelgoed. Laat kinderen er niet mee of in de buurt van spelen .
3. Overschrijd de aangegeven waarde niet gewicht capaciteiten.
4. Gebruik het apparaat alleen op een vlakke, vlakke, harde en gladde ondergrond die een volledig geladen waterkanhouder veilig kan ondersteunen.
5. Alleen gebruiken zoals bedoeld.
6. Inspecteer vóór elk gebruik; niet gebruiken als onderdelen los of

beschadigd zijn.

BEWAAR DEZE HANDLEIDING

PARTS LIST

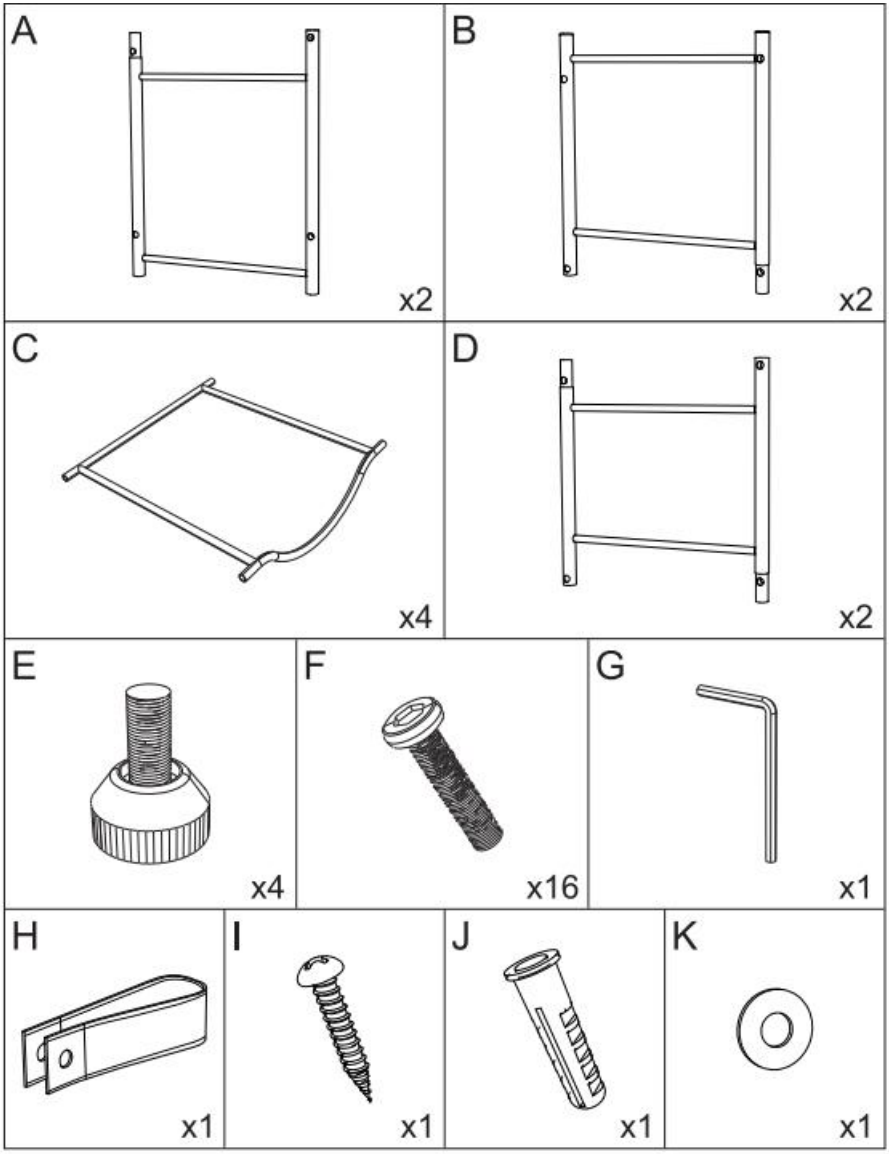

Twee installatiemethoden

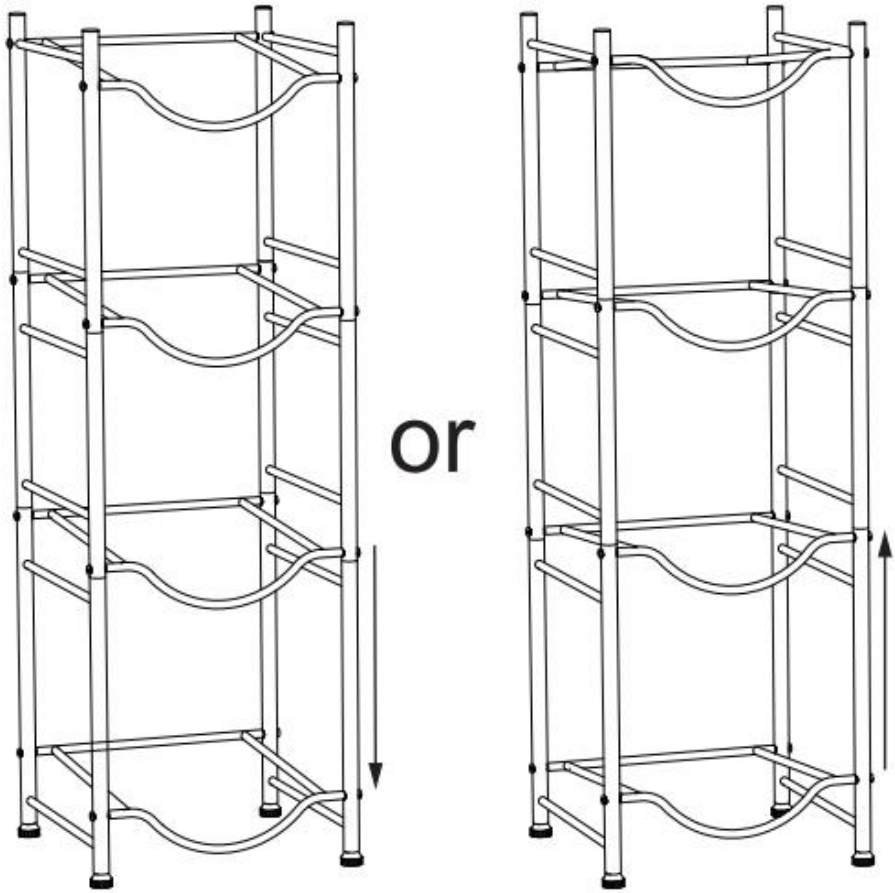

Downtilt

(To page 5,page 6,page 7)

Uptilt

(To page 8,page 9,page 10)

Neerwaarts kantelen

STAP 1

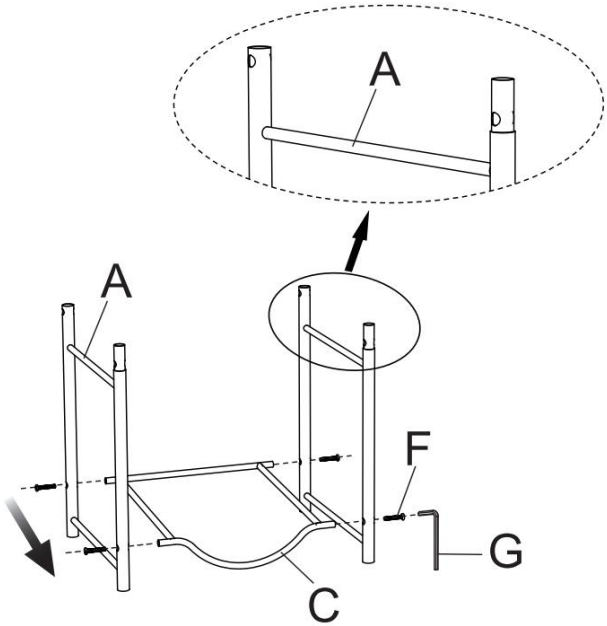

STAP 2

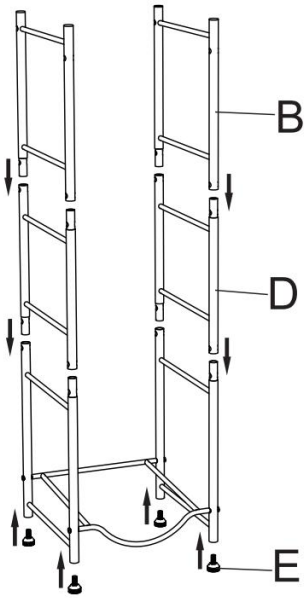

Neerwaarts kantelen

STAP 3

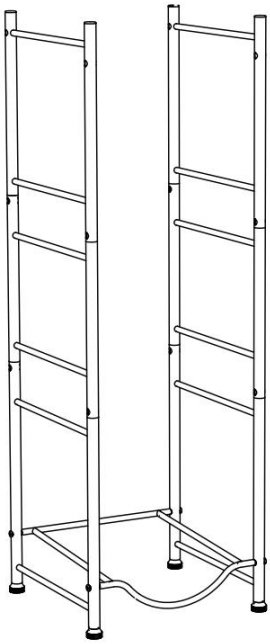

STAP 4

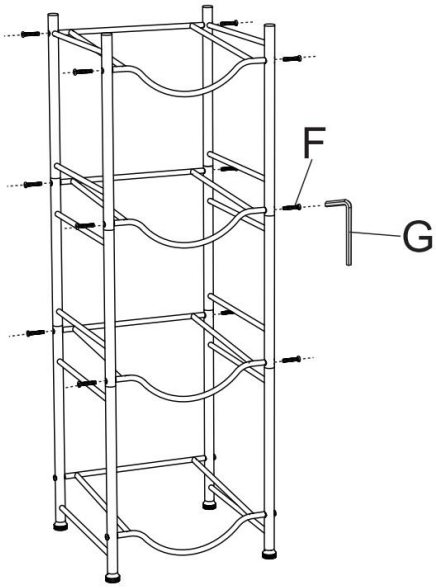

Neerwaarts kantelen

STAP 5

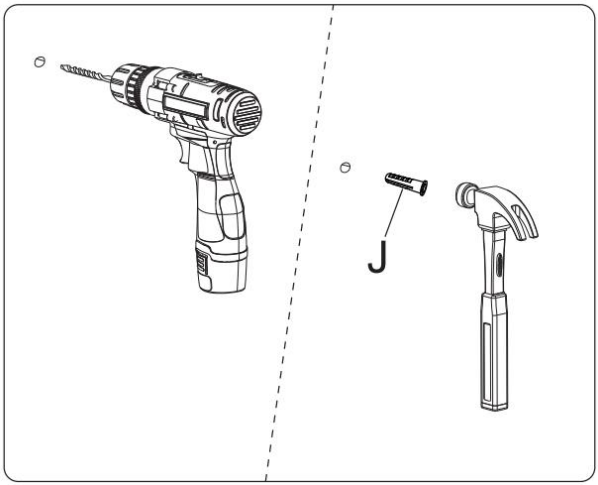

Drill holes in the wall according to the specified distances, and install the provided wall anchors into the holes.

STAP 6

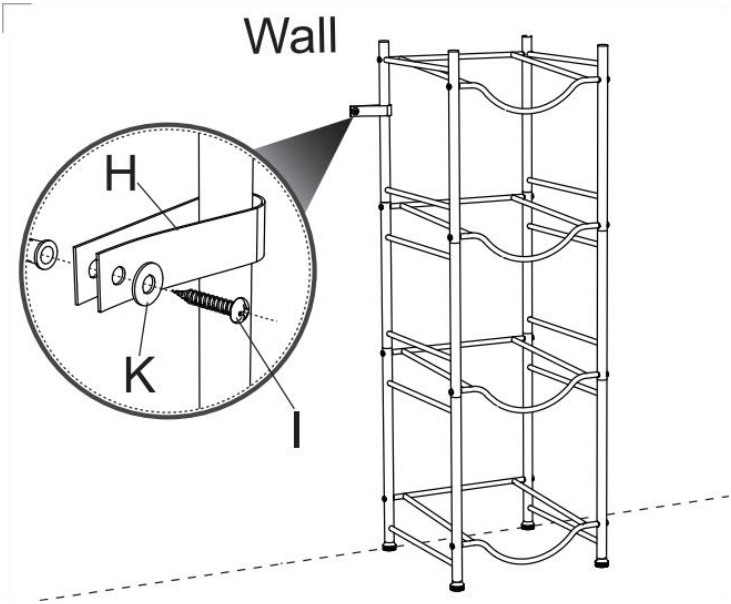

Omhoog

STAP 1

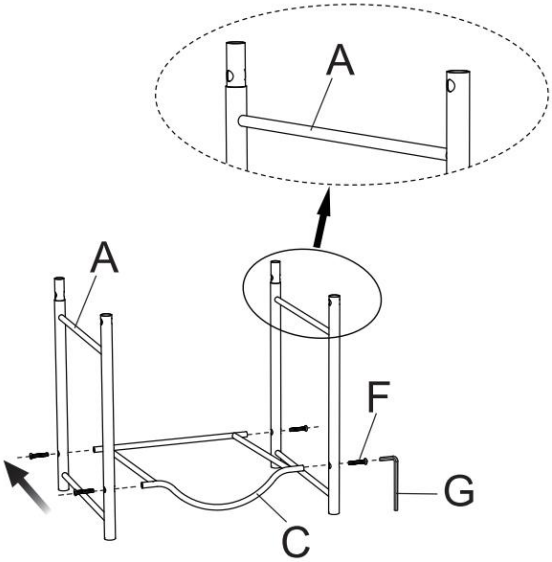

STAP 2

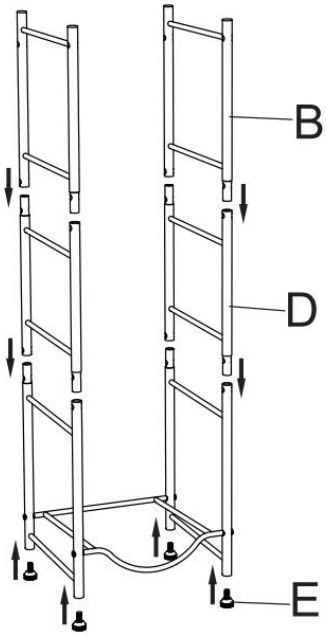

Omhoog

STAP 3

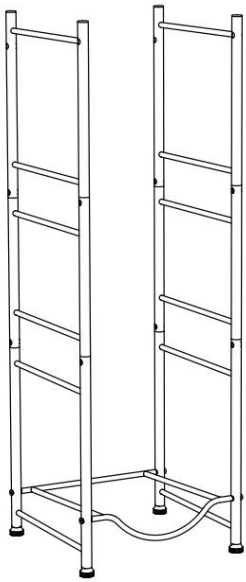

STAP 4

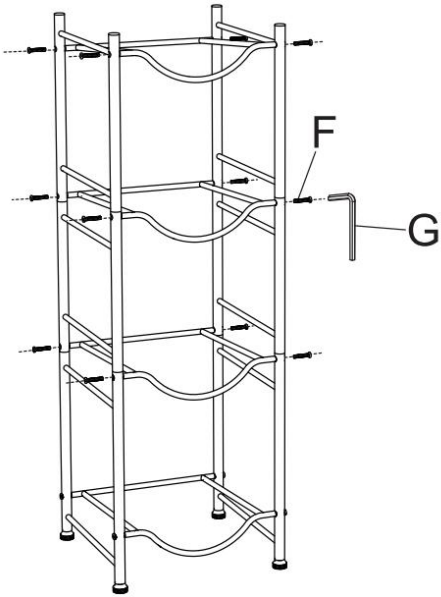

Omhoog
STAP 5

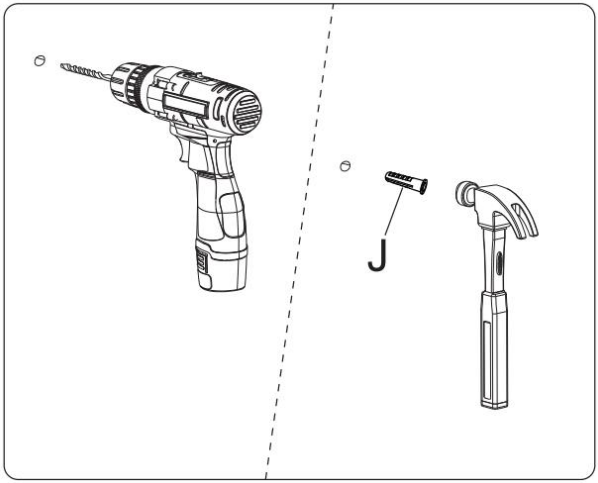

Drill holes in the wall according to the specified distances, and install the provided wall anchors into the holes.

STAP 6

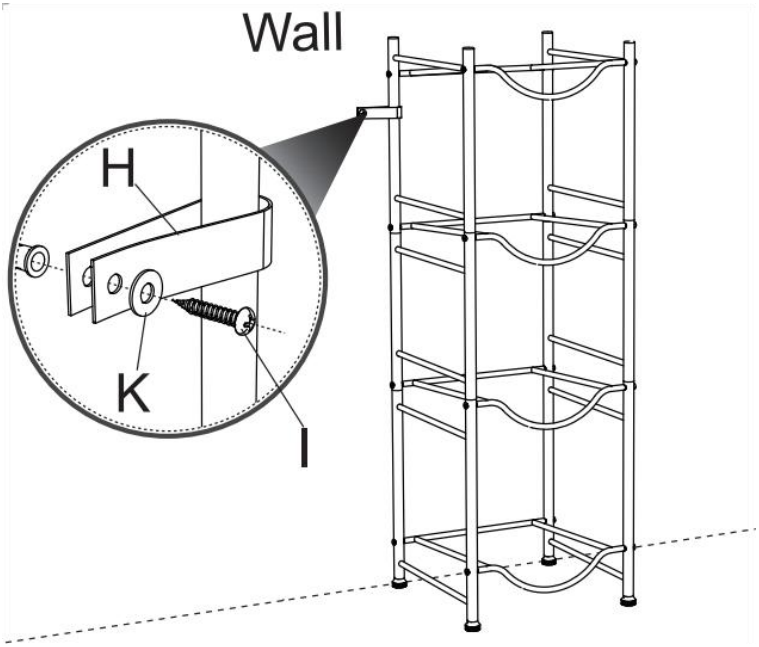

PRODUCT PARAMETER

Model	**4 bidonrek-S**	**4 Flessenrek-B**
Kleur	Zilver	Zwart
Veilig laadgewicht	4 x Wateremmer (19kg)	
Capaciteit	4	
Product grootte	332*330*1047mm	

Fabrikant: Shanghaimuxinmuyeyouxiangongsi
Adres: Shuangchenglu 803nong11hao1602A-1609shi, baoshanqu, shanghai 200000 CN.
Geïmporteerd naar AUS: SIHAO PTY LTD. 1 ROKEVA STREETEASTWOOD NSW 2122 Australië
Geïmporteerd naar de VS: Sanven Technology Ltd. Suite 250, 9166 Anaheim Place, Rancho Cucamonga, CA 91730

EC RE

E-CrossStu GmbH
Mainzer Landstr.69, 60329 Frankfurt am Main.

UK RE

YH CONSULTING LIMITED.
C/O YH Consulting Limited Office 147, Centurion House, London Road, Staines-upon-Thames, Surrey, TW18 4AX

VEVOR®

TOUGH TOOLS, HALF PRICE

Technisch Ondersteuning en e-garantiecertificaat

www.vevor.com/support

VEVOR®

TOUGH TOOLS, HALF PRICE

Teknisk Support och e-garanticertifikat www.vevor.com/support

HÅLLARE FÖR VATTENKANNA

Användarmanual

4 VATTENFLASKSTÄLL-S

4 VATTENFLASKSTÄLL-B

We continue to be committed to provide you tools with competitive price.
"Save Half", "Half Price" or any other similar expressions used by us only represents an estimate of savings you might benefit from buying certain tools with us compared to the major top brands and does not necessarily mean to cover all categories of tools offered by us. You are kindly reminded to verify carefully when you are placing an order with us if you are actually saving half in comparison with the top major brands.

VEVOR®

TOUGH TOOLS, HALF PRICE

WATER JUG HOLDER

MODELL: 4 VATTENFLASKSTÄLL-S , 4 VATTENFLASKSTÄLL-B

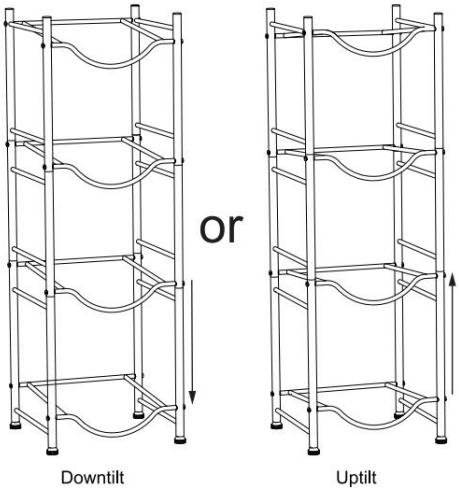

NEED HELP? CONTACT US!

Have product questions? Need technical support? Please feel free to contact us:

Technical Support and E-Warranty Certificate
www.vevor.com/support

This is the original instruction, please read all manual instructions carefully before operating. VEVOR reserves a clear interpretation of our user manual. The appearance of the product shall be subject to the product you received. Please forgive us that we won't inform you again if there are any technology or software updates on our product.

SAFETY INSTRUCTIONS

VARNING:

Läs detta material innan du använder denna produkt. Underlåtenhet att göra det kan resultera i allvarliga skador.

Försiktighetsåtgärder vid montering

1. Montera endast enligt dessa instruktioner. Felaktig montering kan skapa faror.
2. Använd ANSI-godkända skyddsglasögon och kraftiga arbetshandskar vid montering.
3. Håll monteringsområdet rent och väl upplyst.
4. Håll åskådare borta från området under monteringen.
5. Sätt dig inte ihop om du är trött eller påverkad av alkohol, droger eller medicin.
6. Produktegenskaperna gäller endast för korrekt och färdigmonterade produkter.
7. Montera på en plan, jämn, hård och slät yta som säkert kan stödja vattenkannahållaren.
8. För ytterligare information om delarna som listas på följande sidor, se monteringsdiagrammet i denna manual. Packa upp och separera alla delar på ett rent arbetsområde.

Använd försiktighetsåtgärder

1. SIT ELLER STÅ INTE PÅ DETTA FÖREMÅL.
2. Denna produkt är inte en leksak. Låt inte barn leka med eller nära den .
3. inte specificerat viktkapacitet.
4. Använd endast på en plan, jämn, hård och slät yta som säkert kan stödja en fulladdad vattenkannahållare.
5. Använd endast som avsett.
6. Inspektera före varje användning; Använd inte om delar är lösa eller skadade.

SPARA DENNA MANUAL

PARTS LIST

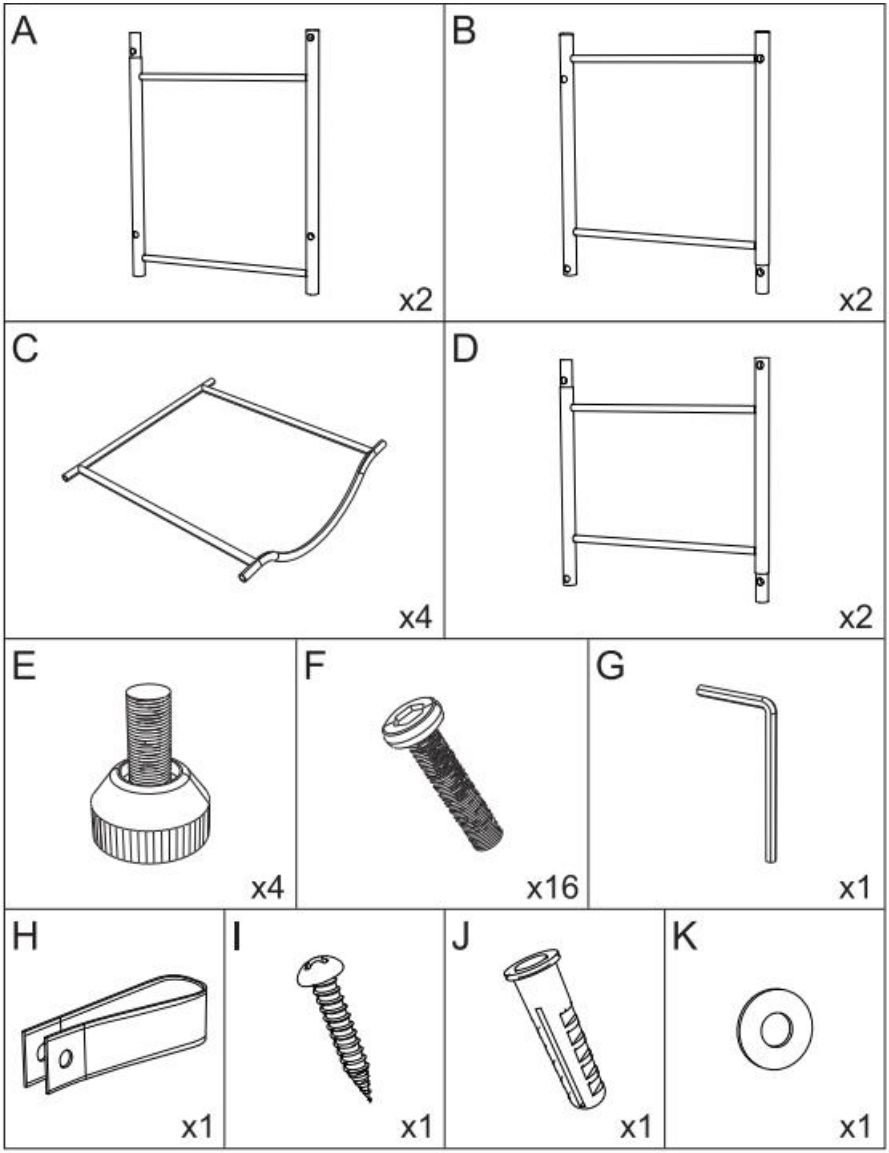

Två installationsmetoder

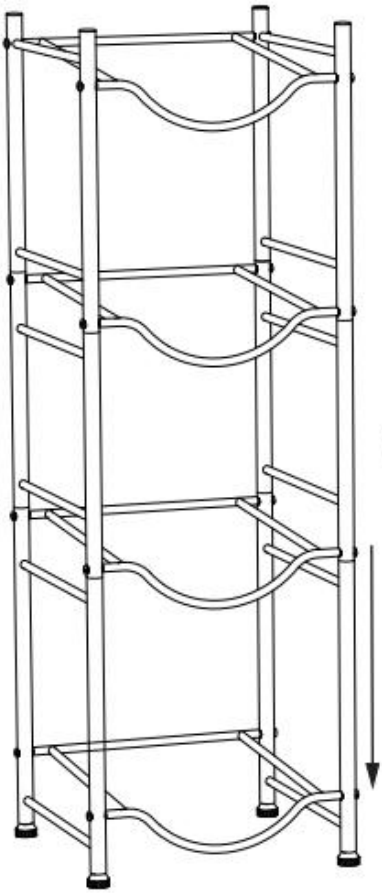

Downtilt

(To page 5,page 6,page 7)

or

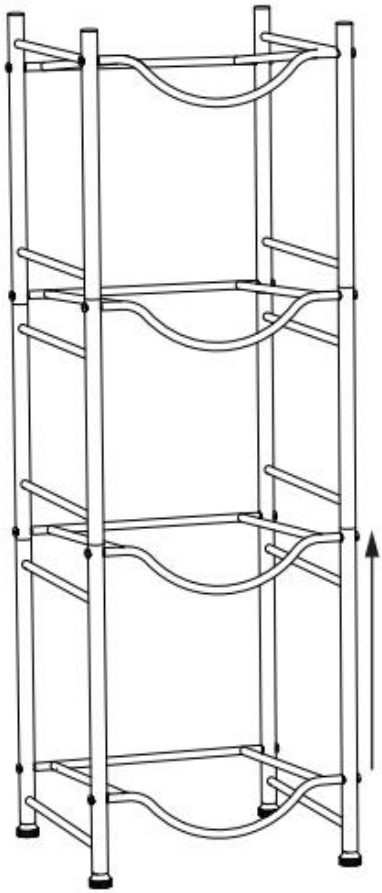

Uptilt

(To page 8,page 9,page 10)

Nedåtlutning

STEG 1

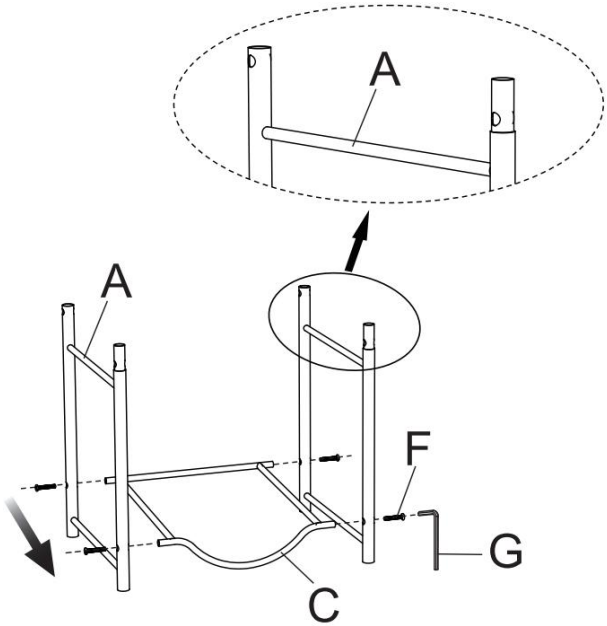

STEG 2

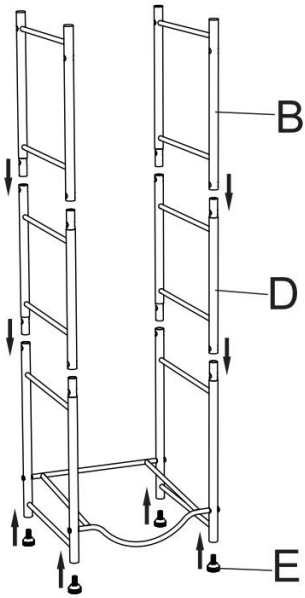

Nedåtlutning

STEG 3

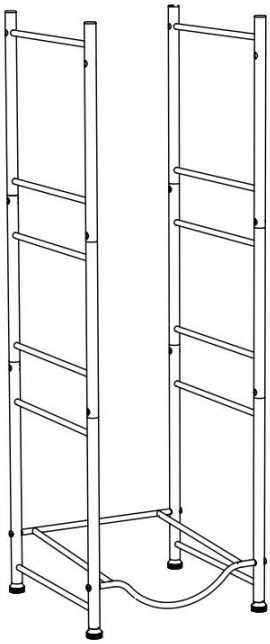

STEG 4

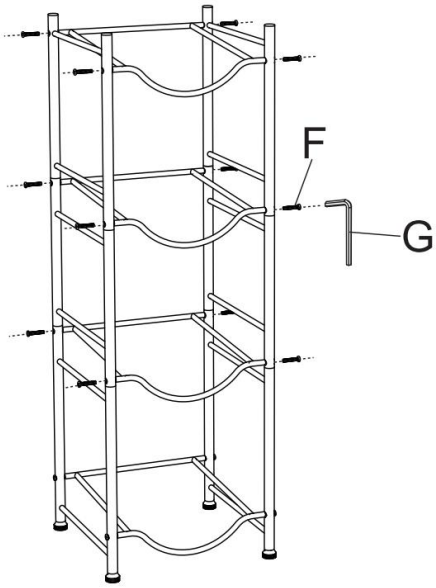

Nedåtlutning

STEG 5

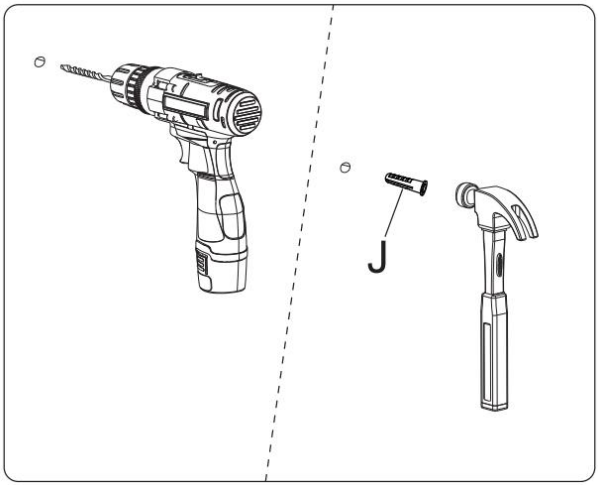

Drill holes in the wall according to the specified distances, and install the provided wall anchors into the holes.

STEG 6

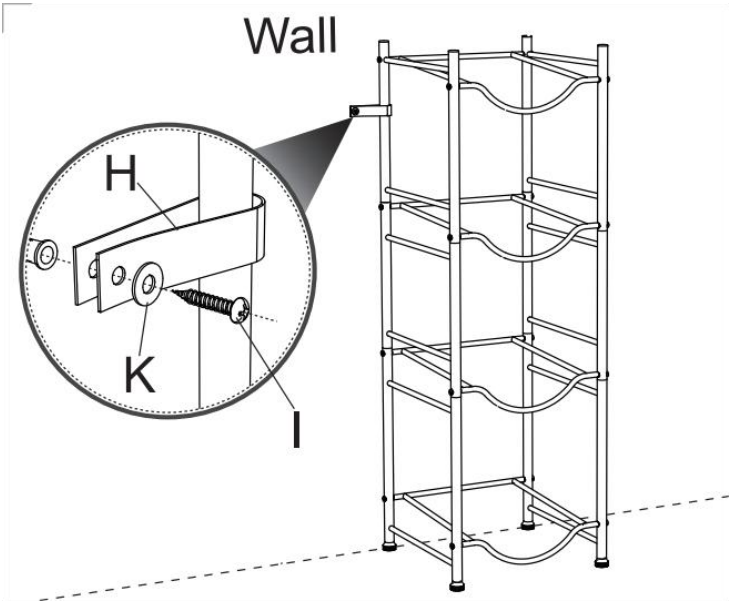

Uptilt

STEG 1

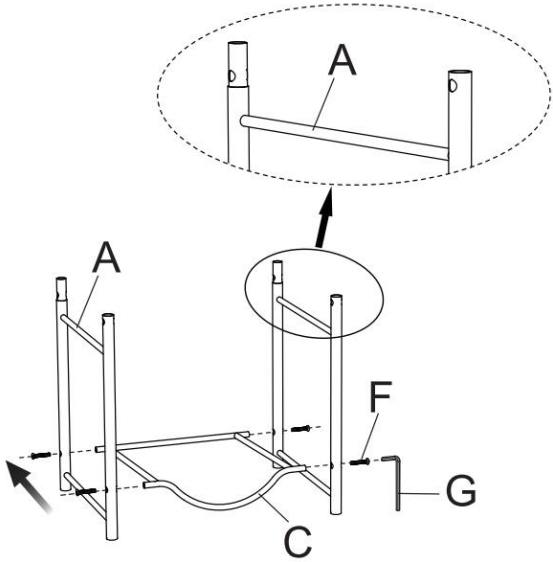

STEG 2

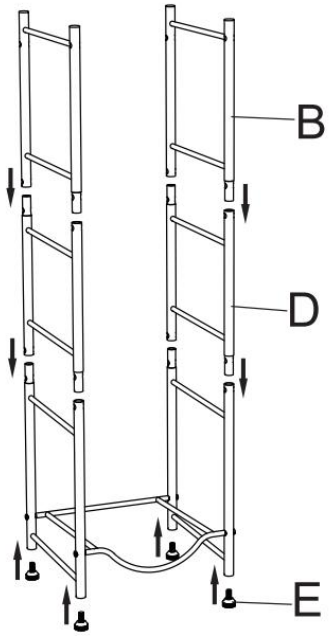

Uptilt
STEG 3 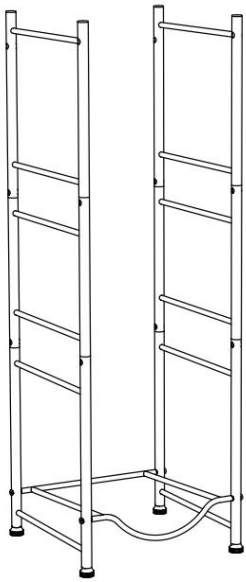
STEG 4 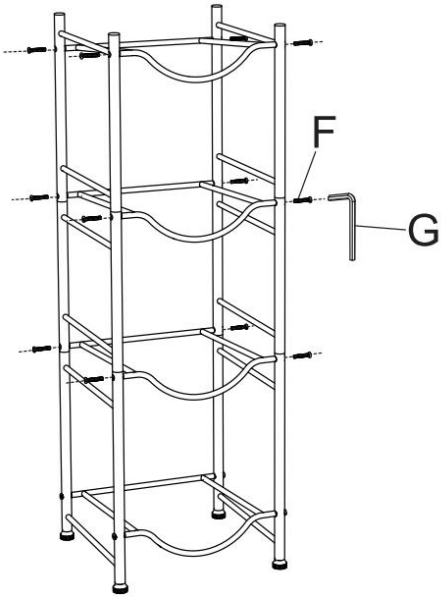

Uptilt

STEG 5

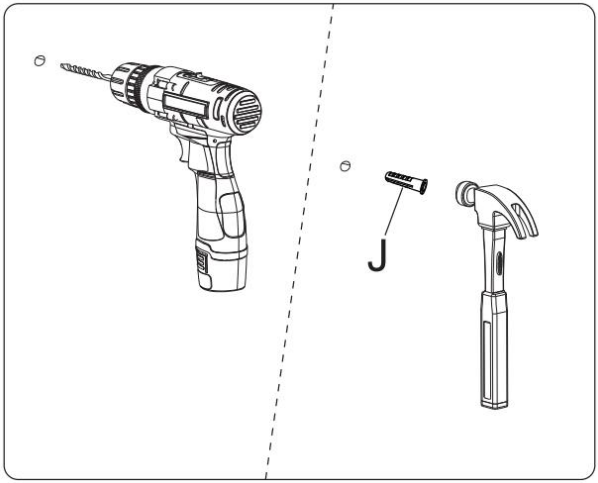

Drill holes in the wall according to the specified distances, and install the provided wall anchors into the holes.

STEG 6

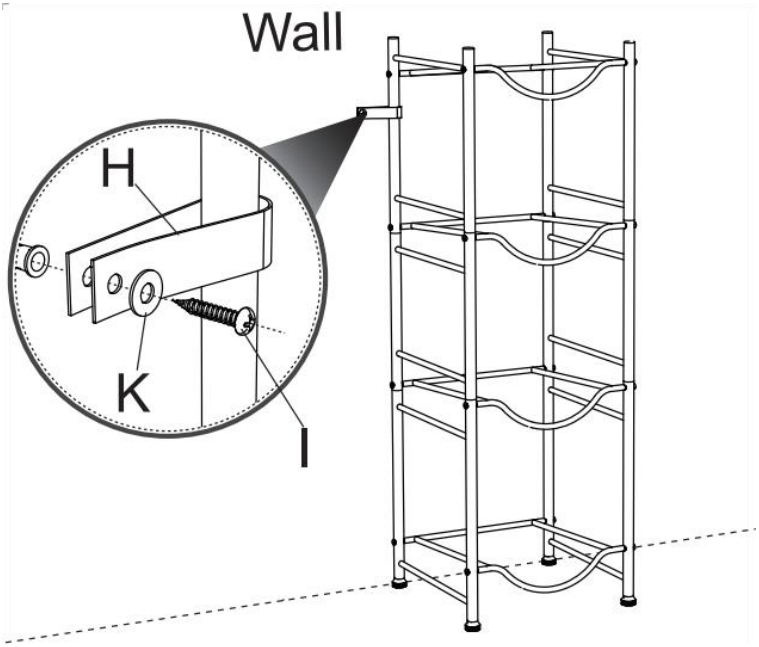

PRODUCT PARAMETER

Modell	**4 vattenflaskställ-S**	**4 vattenflaskställ-B**
Färg	Silver	Svart
Säker lastvikt	4 x vattenhink (19 kg)	
C kapacitet	4	
Produktstorlek	332*330*1047mm	

Tillverkare: Shanghaimuxinmuyeyouxiangongsi
Adress: Shuangchenglu 803nong11hao1602A-1609shi, baoshanqu, shanghai 200000 CN.
Importerad till AUS: SIHAO PTY LTD. 1 ROKEVA STREETEASTWOOD NSW 2122 Australien
Importerad till USA: Sanven Technology Ltd. Suite 250, 9166 Anaheim Place, Rancho Cucamonga, CA 91730

EC RE

E-CrossStu GmbH
Mainzer Landstr.69, 60329 Frankfurt am Main.

UK RE

YH CONSULTING LIMITED.
C/O YH Consulting Limited Office 147, Centurion House, London Road, Staines-upon-Thames, Surrey, TW18 4AX

VEVOR®

TOUGH TOOLS, HALF PRICE

Teknisk Support och e-garanticertifikat

www.vevor.com/support

VEVOR®

TOUGH TOOLS, HALF PRICE

Técnico Soporte y certificado de garantía electrónica www.vevor.com/support

SOPORTE PARA JARRA DE AGUA de USUARIO

ESTANTE PARA 4 BOTELLAS DE AGUA-S
ESTANTE PARA 4 BOTELLAS DE AGUA B

We continue to be committed to provide you tools with competitive price.
"Save Half", "Half Price" or any other similar expressions used by us only represents an estimate of savings you might benefit from buying certain tools with us compared to the major top brands and does not necessarily mean to cover all categories of tools offered by us. You are kindly reminded to verify carefully when you are placing an order with us if you are actually saving half in comparison with the top major brands.

VEVOR®

TOUGH TOOLS, HALF PRICE

WATER JUG HOLDER

MODELO: 4 ESTANTES PARA BOTELLAS DE AGUA S , 4 ESTANTES PARA BOTELLAS DE AGUA B

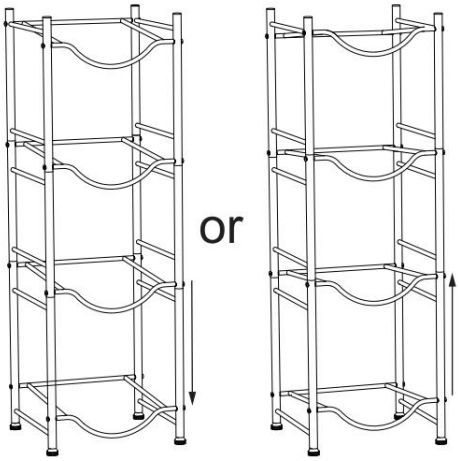

Downtilt Uptilt

NEED HELP? CONTACT US!

Have product questions? Need technical support? Please feel free to contact us:

Technical Support and E-Warranty Certificate
www.vevor.com/support

This is the original instruction, please read all manual instructions carefully before operating. VEVOR reserves a clear interpretation of our user manual. The appearance of the product shall be subject to the product you received. Please forgive us that we won't inform you again if there are any technology or software updates on our product.

SAFETY INSTRUCTIONS

ADVERTENCIA:

Lea este material antes de usar este producto. De lo contrario, se pueden producir lesiones graves.

Precauciones de montaje

1. Ensamble únicamente de acuerdo con estas instrucciones. Un montaje inadecuado puede crear peligros.
2. Use gafas de seguridad aprobadas por ANSI y guantes de trabajo resistentes durante el montaje.
3. Mantenga el área de reunión limpia y bien iluminada.
4. Mantenga a los transeúntes fuera del área durante el montaje.
5. No se reúna si está cansado o bajo la influencia de alcohol, drogas o medicamentos.
6. Las capacidades del producto se aplican únicamente a productos ensamblados de manera adecuada y completa.
7. Ensamble sobre una superficie plana, nivelada, dura y lisa capaz de soportar de manera segura el soporte para jarra de agua.
8. Para obtener información adicional sobre las piezas enumeradas en las siguientes páginas, consulte el diagrama de montaje de este manual. Desenvuelva y separe todas las piezas en un área de trabajo limpia.

Use precauciones

1. NO SE SIENTE NI SE PARE SOBRE ESTE ARTÍCULO.
2. Este producto no es un juguete. No permita que los niños jueguen con él o cerca de él .
3. No exceda lo especificado capacidades de peso.
4. Úselo únicamente sobre una superficie plana, nivelada, dura y lisa que pueda soportar de manera segura un soporte para jarra de agua completamente cargado.
5. Úselo únicamente según lo previsto.
6. Inspeccionar antes de cada uso; no lo utilice si las piezas están sueltas o dañadas.

GUARDE ESTE MANUAL

PARTS LIST

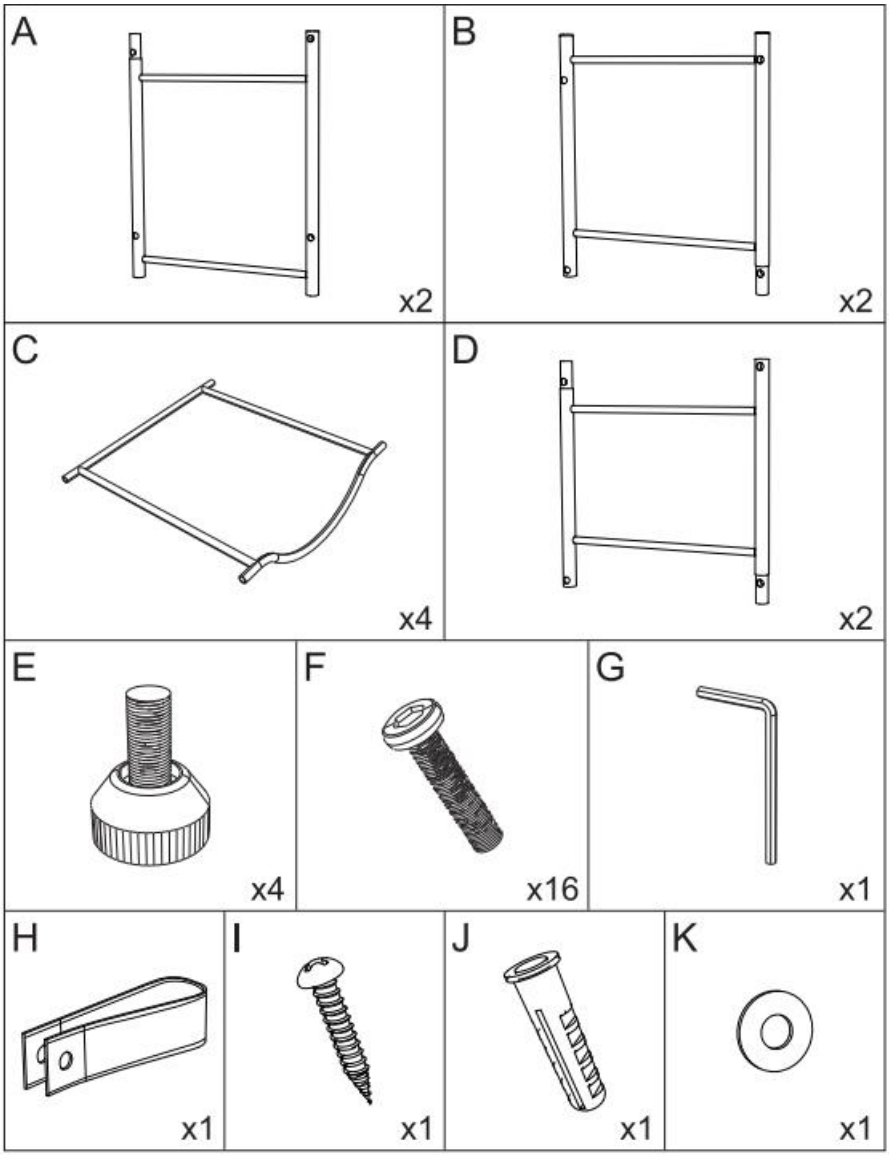

Dos métodos de instalación

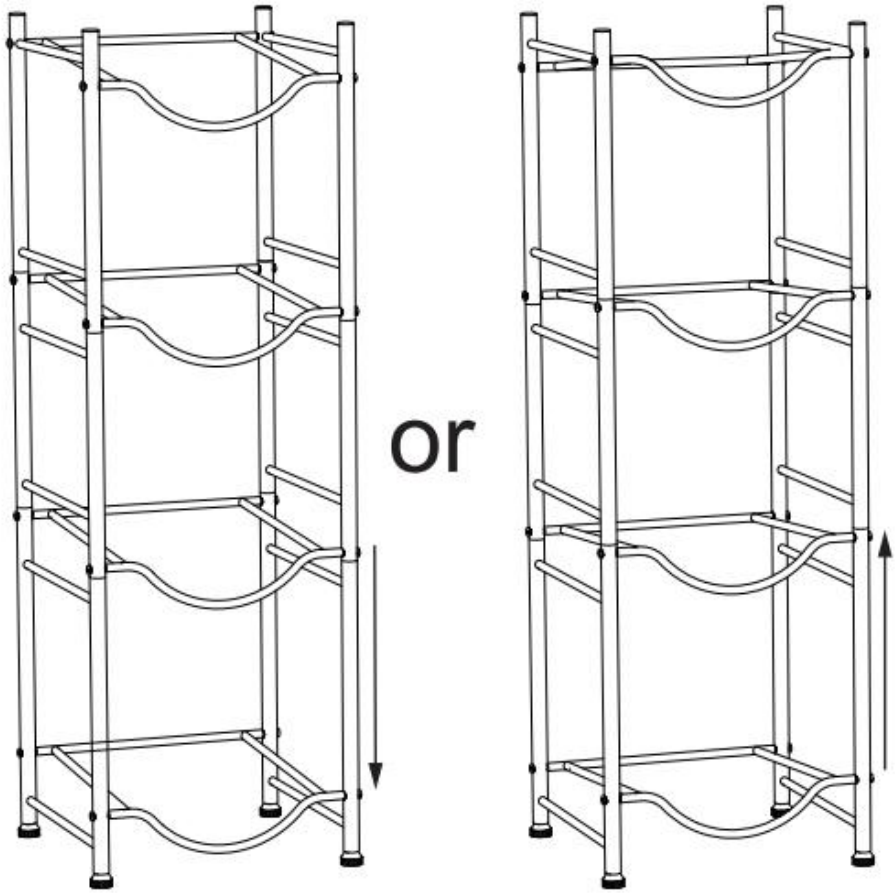

Downtilt

(To page 5,page 6,page 7)

Uptilt

(To page 8,page 9,page 10)

Inclinación hacia abajo

PASO 1

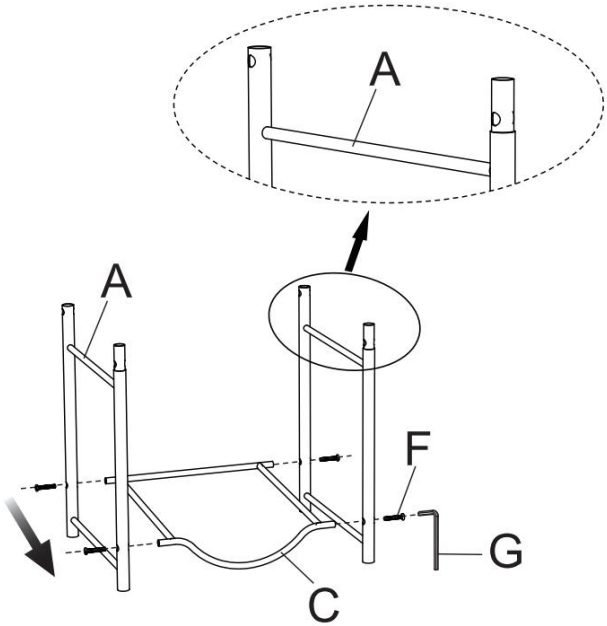

PASO 2

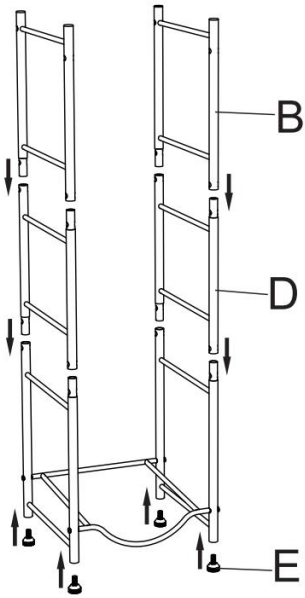

Inclinación hacia abajo

PASO 3

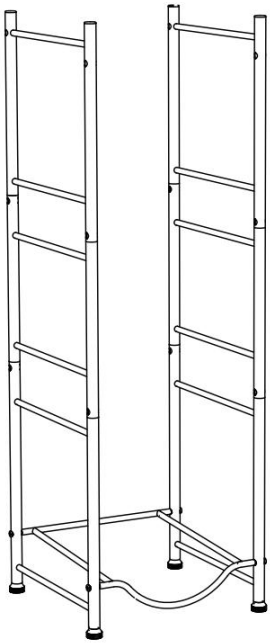

PASO 4

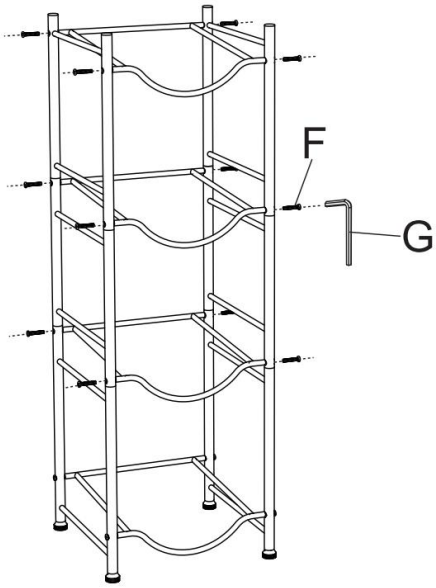

Inclinación hacia abajo

PASO 5

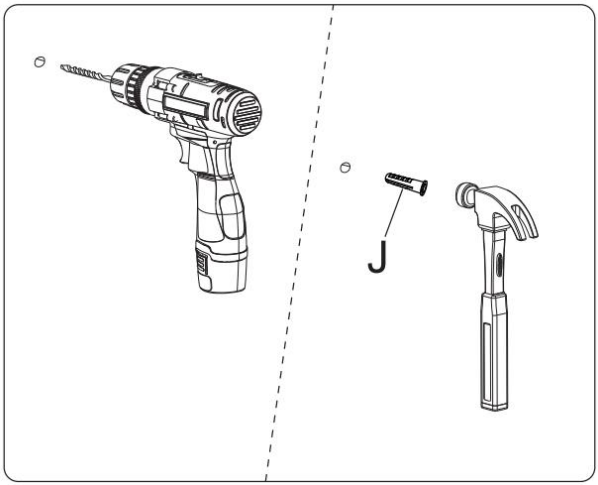

Drill holes in the wall according to the specified distances, and install the provided wall anchors into the holes.

PASO 6

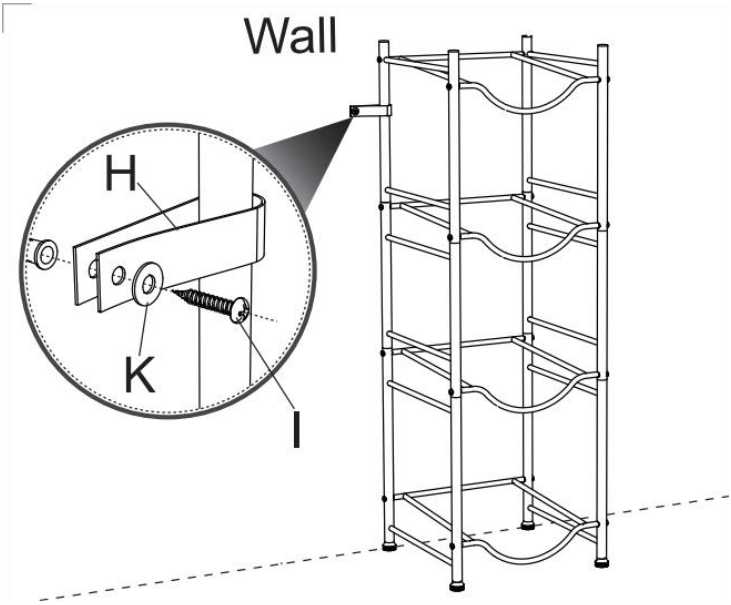

inclinación hacia arriba

PASO 1

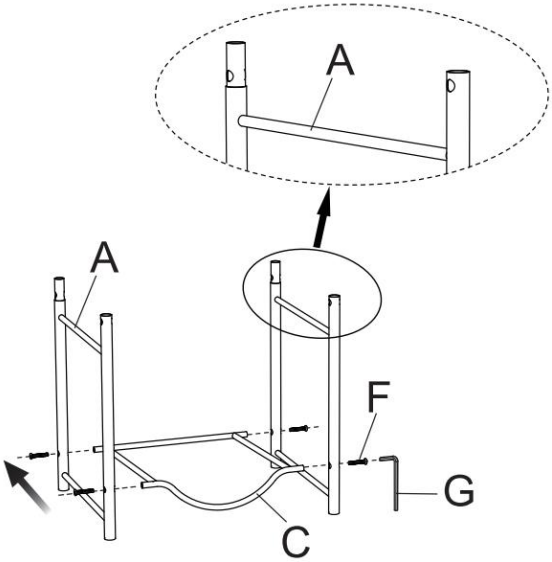

PASO 2

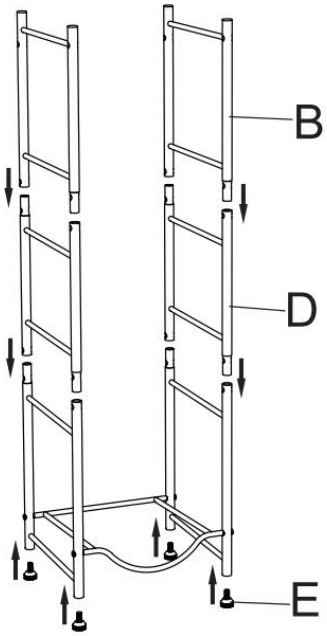

inclinación hacia arriba
PASO 3
PASO 4

inclinación hacia arriba

PASO 5

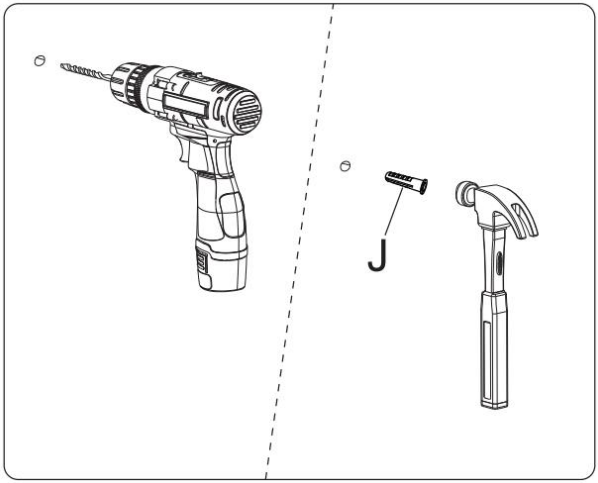

Drill holes in the wall according to the specified distances, and install the provided wall anchors into the holes.

PASO 6

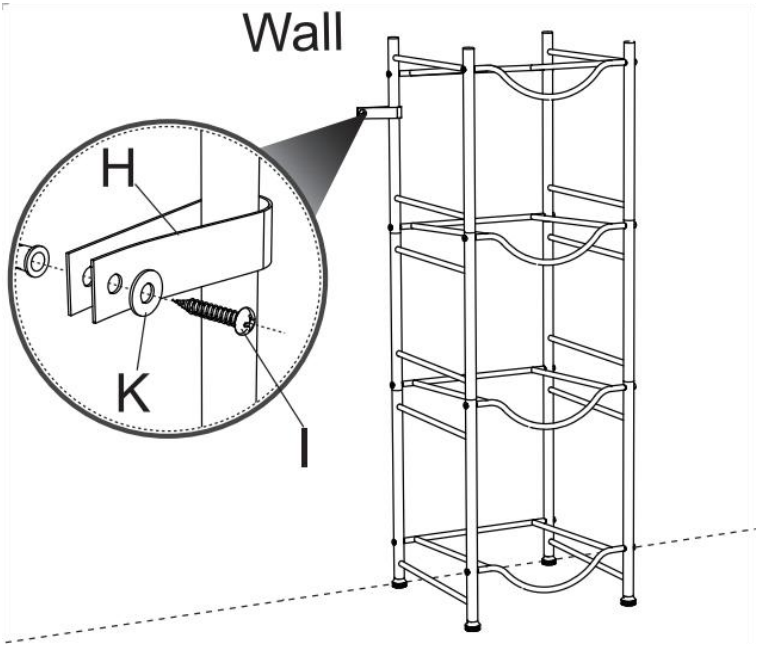

PRODUCT PARAMETER

Modelo	**Estante para 4 botellas de agua-S**	**Estante para 4 botellas de agua B**
Color	Plata	Negro
Peso de carga seguro	4 cubos de agua (19 kg)	
Capacidad	4	
Tamaño del producto	332*330*1047mm	

Fabricante: Shanghaimuxinmuyeyouxiangongsi
Dirección: Shuangchenglu 803nong11hao1602A-1609shi, baoshanqu, shanghai 200000 CN.
Importado a AUS: SIHAO PTY LTD. 1 ROKEVA STREET ASTWOOD NSW 2122 Australia
Importado a EE. UU.: Sanven Technology Ltd. Suite 250, 9166 Anaheim Place, Rancho Cucamonga, CA 91730

EC RE

E-CrossStu GmbH
Mainzer Landstr.69, 60329 Frankfurt am Main.

UK RE

YH CONSULTING LIMITED.
C/O YH Consulting Limited Office 147, Centurion House, London Road, Staines-upon-Thames, Surrey, TW18 4AX

VEVOR®

TOUGH TOOLS, HALF PRICE

Técnico Certificado de soporte y garantía electrónica

www.vevor.com/support

VEVOR®

TOUGH TOOLS, HALF PRICE

Tecnico Supporto e certificato di garanzia elettronica www.vevor.com/support

PORTA BROCCA D'ACQUA

MANUALE D' uso

4 PORTABOTTIGLIE D'ACQUA-S
4 PORTABOTTIGLIE D'ACQUA-B

We continue to be committed to provide you tools with competitive price.
"Save Half", "Half Price" or any other similar expressions used by us only represents an estimate of savings you might benefit from buying certain tools with us compared to the major top brands and does not necessarily mean to cover all categories of tools offered by us. You are kindly reminded to verify carefully when you are placing an order with us if you are actually saving half in comparison with the top major brands.

VEVOR®

TOUGH TOOLS, HALF PRICE

WATER JUG HOLDER

MODELLO: PORTABOTTIGLIE PER 4 BOTTIGLIE D'ACQUA-S , PORTABOTTIGLIE PER 4 BOTTIGLIE D'ACQUA-B

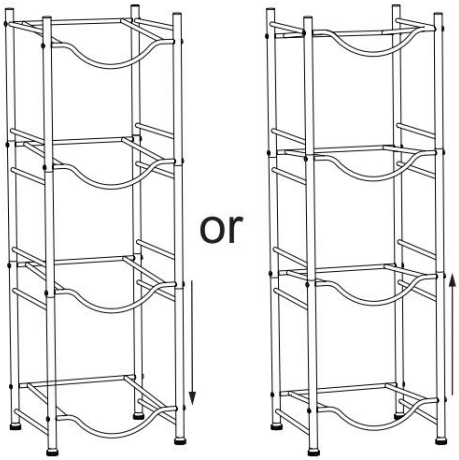

Downtilt Uptilt

NEED HELP? CONTACT US!

Have product questions? Need technical support? Please feel free to contact us:

Technical Support and E-Warranty Certificate
www.vevor.com/support

This is the original instruction, please read all manual instructions carefully before operating. VEVOR reserves a clear interpretation of our user manual. The appearance of the product shall be subject to the product you received. Please forgive us that we won't inform you again if there are any technology or software updates on our product.

SAFETY INSTRUCTIONS

AVVERTIMENTO:

Leggere questo materiale prima di utilizzare questo prodotto. In caso contrario si potrebbero causare lesioni gravi.

Precauzioni per il montaggio

1. Assemblare solo secondo queste istruzioni. Un montaggio improprio può creare pericoli.
2. Indossare occhiali di sicurezza approvati ANSI e guanti da lavoro pesanti durante il montaggio.
3. Mantenere l'area di assemblaggio pulita e ben illuminata.
4. Tenere gli astanti lontani dall'area durante il montaggio.
5. Non montare se stanchi o sotto l'effetto di alcol, droghe o farmaci.
6. Le funzionalità del prodotto si applicano solo ai prodotti correttamente e completamente assemblati.
7. Montare su una superficie piana, livellata, dura e liscia in grado di sostenere in modo sicuro il supporto per brocca d'acqua.
8. Per ulteriori informazioni riguardanti le parti elencate nelle pagine seguenti, fare riferimento allo Schema di Montaggio di questo manuale. Scartare e separare tutte le parti in un'area di lavoro pulita.

Usare precauzioni

1. NON SEDERSI O STARE IN PIEDI SU QUESTO ARTICOLO.
2. Questo prodotto non è un giocattolo. Non permettere ai bambini di giocare con esso o nelle sue vicinanze .
3. Non superare quanto specificato capacità di peso.
4. Utilizzare solo su una superficie piana, livellata, dura e liscia in grado di supportare in modo sicuro un supporto per brocca d'acqua completamente carico.
5. Utilizzare solo come previsto.
6. Ispezionare prima di ogni utilizzo; non utilizzare se le parti sono allentate o danneggiate.

CONSERVA QUESTO MANUALE

PARTS LIST

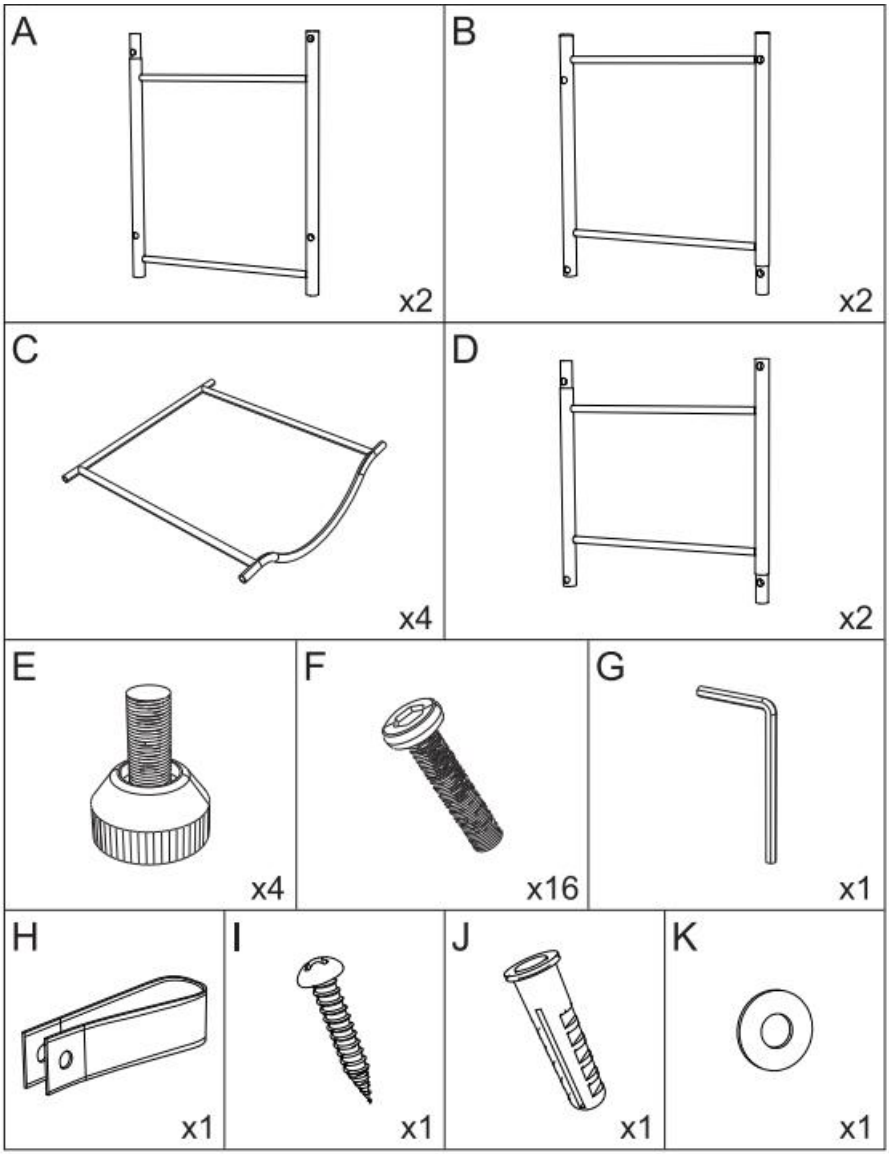

Due metodi di installazione

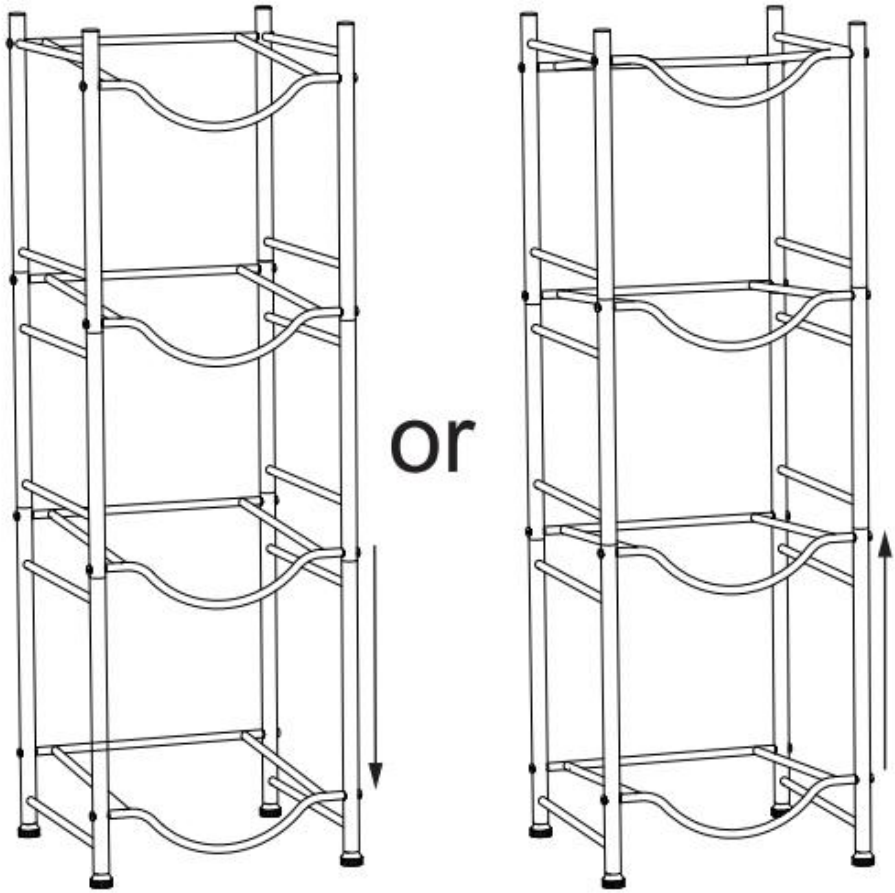

Downtilt

(To page 5,page 6,page 7)

Uptilt

(To page 8,page 9,page 10)

Inclinazione verso il basso

FARE UN PASSO 1

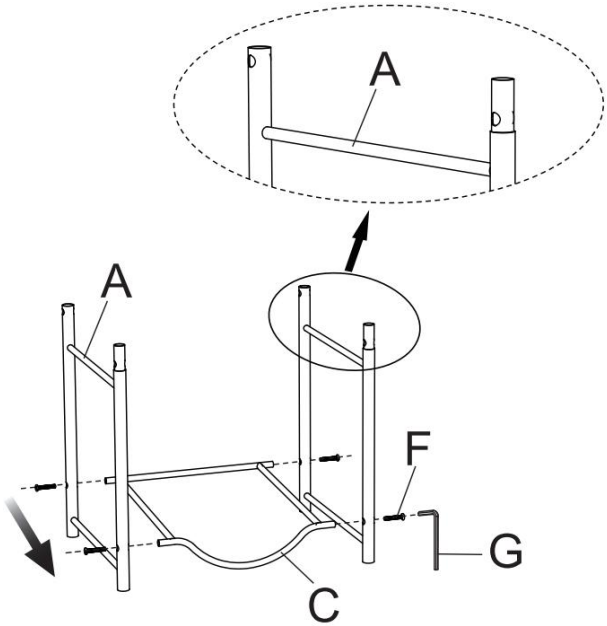

FARE UN PASSO 2

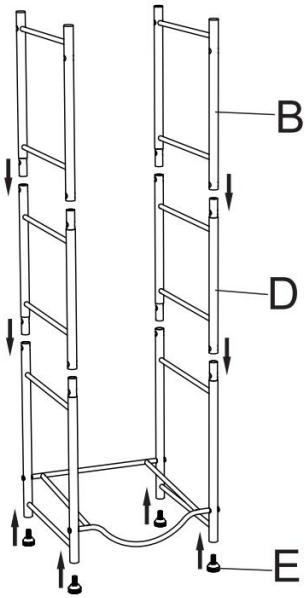

Inclinazione verso il basso

FARE UN PASSO 3

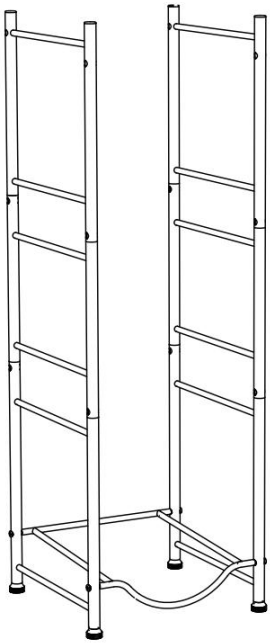

FARE UN PASSO 4

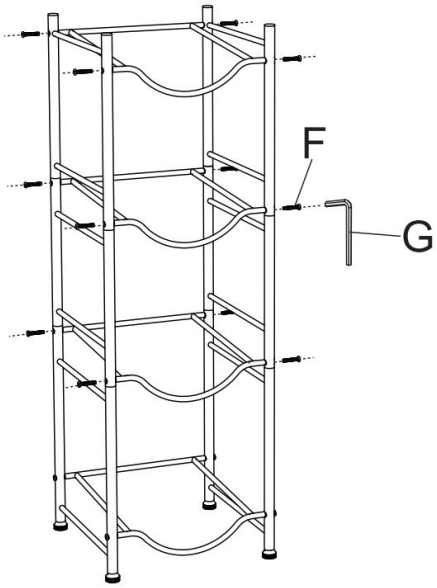

Inclinazione verso il basso

FARE UN PASSO 5

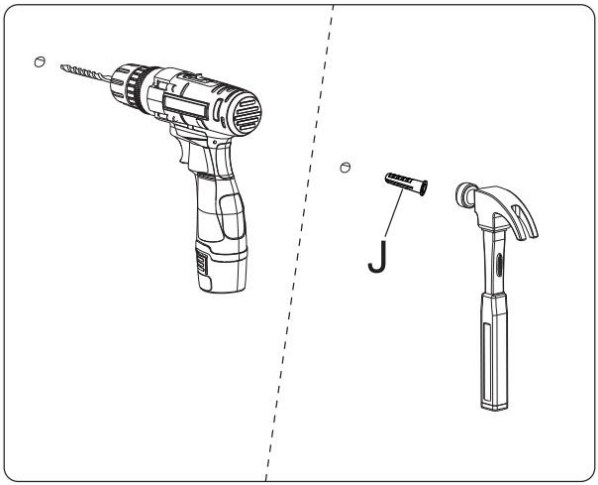

Drill holes in the wall according to the specified distances, and install the provided wall anchors into the holes.

FARE UN PASSO 6

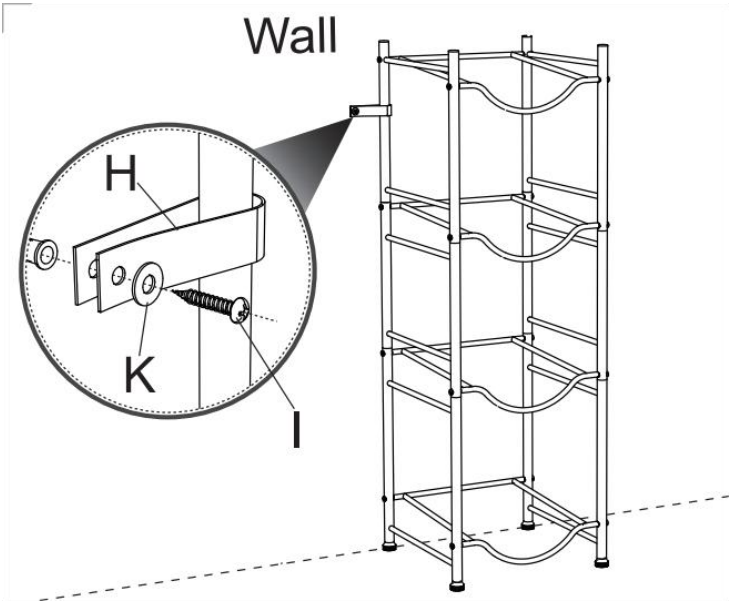

Inclinazione

FARE UN PASSO 1

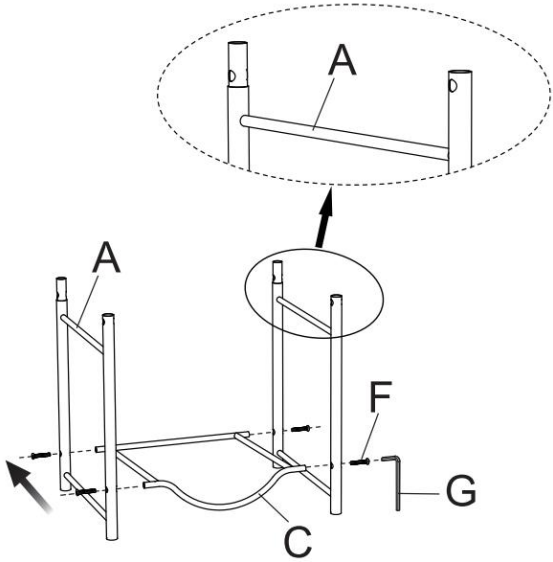

FARE UN PASSO 2

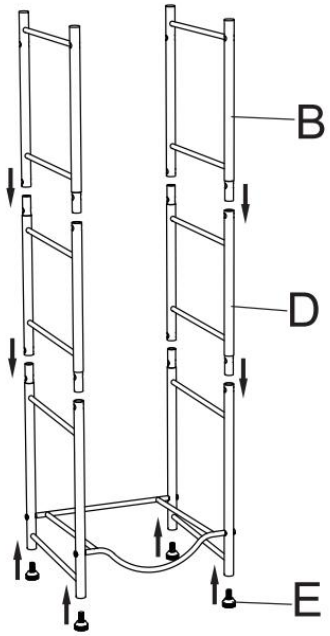

Inclinazione

FARE UN PASSO 3

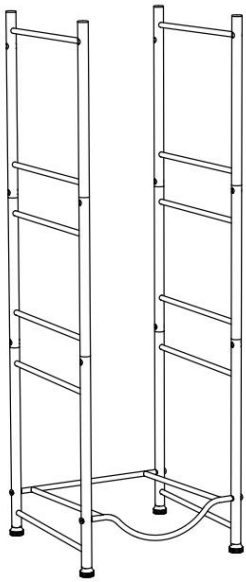

FARE UN PASSO 4

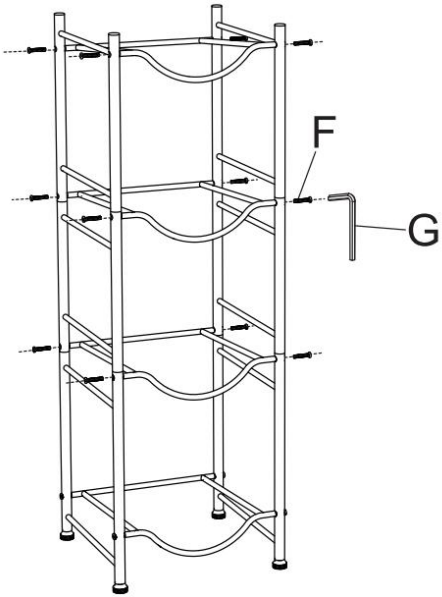

Inclinazione
FARE UN PASSO 5

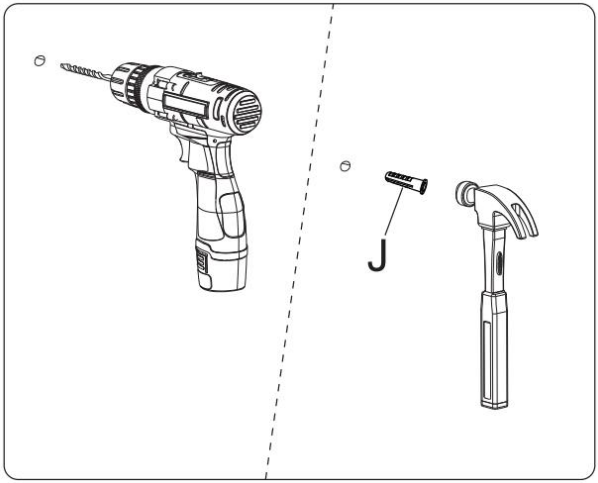

Drill holes in the wall according to the specified distances, and install the provided wall anchors into the holes.

FARE UN PASSO 6

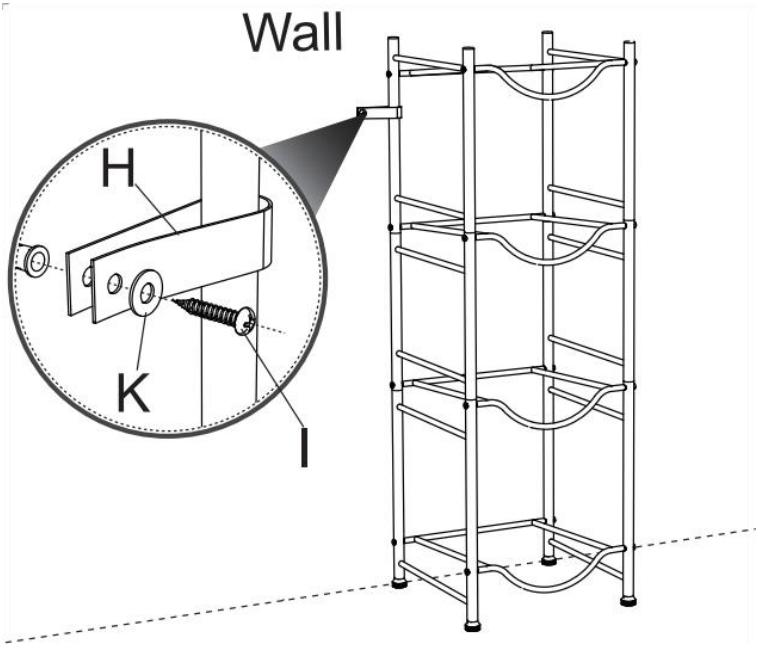

PRODUCT PARAMETER

Modello	**4 Portabottiglie d'acqua-S**	**4 Portabottiglie d'acqua-B**
Colore	Argento	Nero
Peso di caricamento sicuro	4 secchi per l'acqua (19 kg)	
Capacità	4	
Taglia del prodotto	332*330*1047mm	

Produttore: Shanghaimuxinmuyeyouxiangongsi
Indirizzo: Shuangchenglu 803nong11hao1602A-1609shi, baoshanqu, shanghai 200000 CN.
Importato in AUS: SIHAO PTY LTD. 1 ROKEVA STREETEASTWOOD NSW 2122 Australia
Importato negli Stati Uniti: Sanven Technology Ltd. Suite 250, 9166 Anaheim Place, Rancho Cucamonga, CA 91730

EC RE

E-CrossStu GmbH
Mainzer Landstr.69, 60329 Frankfurt am Main.

UK RE

YH CONSULTING LIMITED.
C/O YH Consulting Limited Office 147, Centurion House, London Road, Staines-upon-Thames, Surrey, TW18 4AX

VEVOR®

TOUGH TOOLS, HALF PRICE

Tecnico Supporto e certificato di garanzia elettronica

www.vevor.com/support