VEVOR®

TOUGH TOOLS, HALF PRICE

Technical Support and E-Warranty Certificate

www.vevor.com/support

METAL WALL FAN USER MANUAL

MODEL: BT-WL18B / WF-18-EWP

We continue to be committed to provide you tools with competitive price. "Save Half", "Half Price" or any other similar expressions used by us only represents an estimate of savings you might benefit from buying certain tools with us compared to the major top brands and does not necessarily mean to cover all categories of tools offered by us. You are kindly reminded to verify carefully when you are placing an order with us if you are actually saving half in comparison with the top major brands.

1	WF-18-EWP (EU)		3	BT-WL18B	
2	WF-18-EWP (AU)				

VEVOR®

METAL WALL FAN

MODEL: BT-WL18B / WF-18-EWP

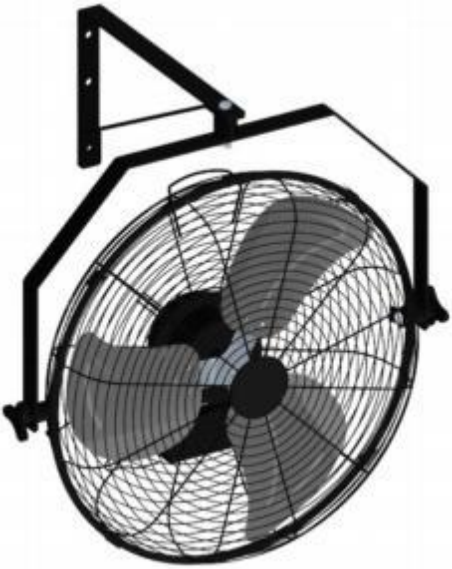

<Picture Only For Reference>

NEED HELP? CONTACT US!

Have product questions? Need technical support? Please feel free to contact us:

Technical Support and E-Warranty Certificate
www.vevor.com/support

This is the original instruction, please read all manual instructions carefully before operating. VEVOR reserves a clear interpretation of our user manual. The appearance of the product shall be subject to the product you received. Please forgive us that we won't inform you again if there are any technology or software updates on our product.

READ & SAVE THESE INSTRUCTIONS

Warning:

Shock Hazard

Do not use it in a humid and rainy environment for a long time, If it is used,please cover the fan. If there is water on the surface of the fan, wipe it clean before use in order to prevent electric shock.

Hot Surfaces

Do not touch fan motor when in use.This motor is hot when in use, to avoid burns, do not let bare skin touch hot surfaces.

Fire Hazard

Fans have arcing or sparking parts inside. Do not use near combustible materials or flammable gases or sources of heat. DO NOT USE in areas where gasoline, paint or flammable materials are used or stored. To prevent a possible fire, do not block air intakes or exhaust in any manner, Do not insert or allow foreign objects to enter any ventilation or exhaust opening as this may cause an electric shock, fire, or damage the fan.

Electrical Shock Hazard

Do not use with damaged cord or plug. Use with adequate electrical system that is up to code. If the supply cord is damaged, it must be replaced by the manufacturer, its service agent or similarly qualified persons in order to avoid a hazard.

⚠CAUTION:
to Prevent Electric Shock, this product has a three prong grounded plug that must be
inserted into a matching properly grounded outlet to reduce the risk of electrical shock. Do not attempt to defeat this safety feature.

⚠Warning:
to Reduce the Risk of Fire or Electric Shock,do not use this product with any solid-state speed control device.
DO NOT operate any fan with a damaged cord or plug or after fan malfunctions, has been dropped or damaged in any manner.Do not operate fan with a broken blade, safety cage or any visual imperfections. Disconnect power before servicing. For repairs covered under warranty, see warranty statement. For all other repairs contact Comfort Zone Customer Service by telephone or mail for information and assistance.
DO NOT run power cord under carpeting. DO NOT cover cord with throw rugs, runners or the like. Arrange cord away from traffic area where it will not be tripped over. Avoid the use of extension cords due to risk of fire. If an extension cord must be used, the cord must be minimum 14 AWG and rated not less than 1875 watts. Do not use an extension cord unless the plug can be completely inserted into its receptacle. Unplug the fan when not in use. Do not operate fan with its ventilation obstructed.

⚠Warning:
TO REDUCE THE RISK OF FIRE, ELECTRIC, SHOCK,
OR INJURY TO PERSONS, OBSERVE THE FOLLOWING.
a) Installation work and electrical wiring must be done by qualified person(s)in accordance with all applicable codes and standards, including fire-rated construction.
b) When cutting or drilling into wall or ceiling, do not damage electrical wiring and other
hidden utilities.
C) This appliance can be used by children aged from 8 years and above and persons with reduced physical, sensory or mental capabilities or lack of experience and knowledge if they have been given supervision or instruction concerning use of the appliance in a safe way and understand the hazards involved. Children shall not play with the appliance.

Cleaning and user maintenance shall not be made by children without supervision.

PRODUCT DESCRIPTION

TECHNICAL PARAMETER

Brand	VEVOR	
Model	BT-WL18B	WF-18-EWP
Voltage	120 V	220 V
Frequency	60 Hz	50 Hz
Power	90 W	80 W
Power Cord Length	1.8 m	1.8 m
Net Weight	6.15kg/pcs	6.15 kg/pcs
Motor IP Grade	IP44	IP44

Note: If you buy 2 sets/box products, The PART QTY is multiplied the qty of the above table by 2.

INTENDED USE

This product is suitable for use in general relatively dry environment, such as office, industrial and other commercial applications. Use only with electrical wiring that is in good working order and that meets applicable codes and ordinances. If you have any questions whether your wiring is adequate, consult a qualified electrician.
While using your fan, you should follow the IMPORTANT INSTRUCTIONS listed below. As part of those instructions, we have used the word “WARNING”to indicate the level of hazard: WARNING indicates a hazard which, if not avoided, could result in injury or death.

IMPORTANT INSTRUCTIONS

As with all electrical appliances, basic safety precautions should always be followed to reduce the risk of electric shock, fire, or injury to persons, including the following precautions:
1.Read all the instructions before using this fan.

2.Use this fan only as described in this manual. Any other use not recommended by the manufacturer may cause electrical shock,fire or injury to persons.fire or injury to persons. 3.Do not operate the fan with a damaged power cord or after the fan Malfunctions or has been dropped in any manner.
4.Use of extreme caution is necessary when any fan is used by or near children, disabled persons or pets and whenever the fan is left operating unattended.
5.Do not place the fan on a small, not level, uneven or any surface which might allow fan to tip or fall.
6.For proper operation, fan should be placed on a smooth, non-combustible, level surface. 7.Always unplug fan when not in use, when moving from place to place, when assembling or disassembling parts, and before cleaning.
8.The use of attachments, not recommended or sold by the manufacturer, may cause hazards.
9.If you need to use it outdoors on rainy days, cover the fan properly.

10.Do not use it in a humid and rainy environment for a long time. If it is used, please cover the fan.
11.Do not operate the fan with blade guards or any safety device removed.
12.Avoid the use of extension cords due to risk of fire. If an extension cord must be used, the cord must be minimum
14 AWG and rated not less then 1875 watts.
13.Do not run power cord under carpeting. Do not cover cord with throw rugs, runners or the like. Arrange cord away from traffic area where it will not be tripped over.
14.Do not insert or allow any object to enter any openings on the fan. Doing so may cause electric shock and /or fire hazard. Avoid contact with moving parts.
15.This appliance is not intended for use by persons (including children) with reduced physical, sensory or mental capabilities or lack of experience and knowledge, unless they have been given supervision or instruction concerning use of the appliance by a person responsible for their safety.
16.Children should be supervised to ensure they do not play with the appliance.

INSTALLATION

TIPS！Prepare tools in advance:

Cross screw river, Small wrench，Hammer

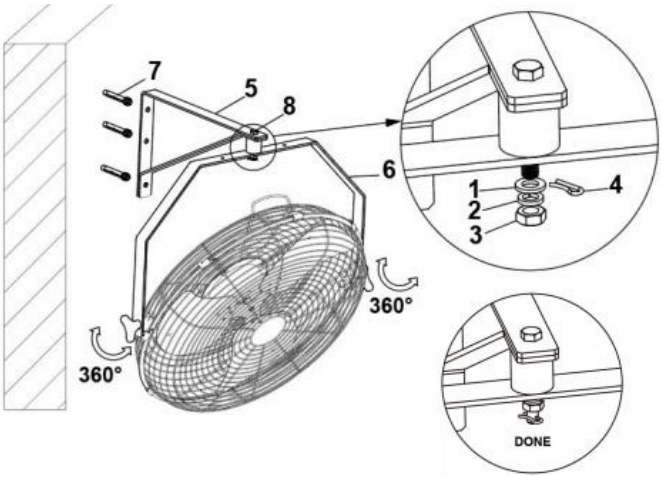

PARTS LIST:

1. Flat gasket	1
2. Spring gasket	1
3. Nut	1
4. Safety plug	1
5. L-iron	1
6. Fan	1
7. Expansion screw	3
8. Screw	1

Installation method

1. First, drill three holes in the wall according to the three holes on the fan bracket.
2. Install three expansion screw(7) on the pre-drilled wall,(see Fig.1.) .
3. Install the L-shaped iron (5) on the wall, and then tighten the three bolts and one nut assembly(7).
4. Install the fan on the L iron, tighten the nut assembly, and finally insert the safety plug(4). 5.Tilting adjustment: Before tilt adjustment, always turn off the fan. first, loosen the
fastening nuts at both ends of the fan.
When installing , you can adjust the upper and lower any angles (see Fig.1.), and finally tighten the solid nuts at both ends.

Installation Instructions

Use the following information as a guideline only. It is the user's responsibility to be sure the location and the wall surface can handle the weight of this fan (14.6 lbs).

The wall fan must be mounted on 12 inch (300mm)thick dry and cement - grouted firm wall or on 4 by 5 inch wood studs / joists.

Use wall bracket as a template for locating the holes to be drilled.

After determining the hole locations, use an appropriate sized drill bit and, drill holes through mounting surface.

It is recommended that a minimum of grade 5 fasteners be used. The following are acceptable surfaces for mounting wall mount assembly.

STEEL SURFACE - When mounting to a steel surface, such as vertical I-beam, drill through holes at pre-marked locations, using a 9/32" drill bit. Attach wall mount assembly to mounting surface using 1/4"-20 hex screw, in combination with 1/4" flat washers, 1/4" lock washers, and 1/4"-20 hex nuts.

MASONRY SURFACE - When mounting to a masonry surface use a 1/4" expansion type bolt or 1/4" masonry lag with shield designed to handle the weight of this fan. Drill holes at pre-marked locations using appropriate sized drill bit as recommended for the fastener.

HOW TO USE

Fan operation:

Always operate the fan in the upright position following all instructions and recommendations listed in this manual.

Fan location:

Place the fan in the area of the room that will provide proper fan cooling.

Fan connection:

Wall outlet. Be sure plug fits tightly in outlet. A loose connection may cause overheating and damage to the plug or fan.

WARNING: Operating Voltage according to product label shown. others, could damage fan.

Note:

To prevent overloading a circuit, do not plug the fan into a circuit that is servicing other electrical needs.

Speed control:

To operate the fan, each pull of the string will cycle through the following settings:

OFF LOW MED HIGH OFF

CARE AND MAINTENANCE

Cleaning:
CAUTION-Before cleaning the fan be sure to disconnect power cord from the plug. Clean the grille surface with a clean damp cloth. Do not use harsh chemical or abrasive cleaners. DO NOT IMMERSE THE FAN OR ANY WIRES IN WATER.Replace front grille before fan use. Allow fan to dry completely before use. Periodic grille cleaning with a vacuum will prevent dust build up. The motor is sealed and does no require any interior maintenance,cleaning or lubrication.

Maintenance:
The internal motor bearings are permanently lubricated at the factory and do not require any additional

Repair:
DO NOT OPERATE THE FAN WITHOUT THE GRILLE IN PLACE. DO NOT USE THE FAN
IF IT HAS MALFUNCTIONED
OR BECOME DAMAGED IN ANY WAY.

Storage:
Keep original carton for storage of the fan. Coil and tie the power cord to avoid damage during storage.

TROUBLE SHOOTING

Q:Excessive noise
A:1.It is normal that there is noise during operation. If too loud, please set the fan to lower speed.
2. Check if the blade is installed properly.
3.

Q: Fan does not operate
A:1.Make sure the fan is connected to a powered electrical outlet.
2. Clean the blade regularly.

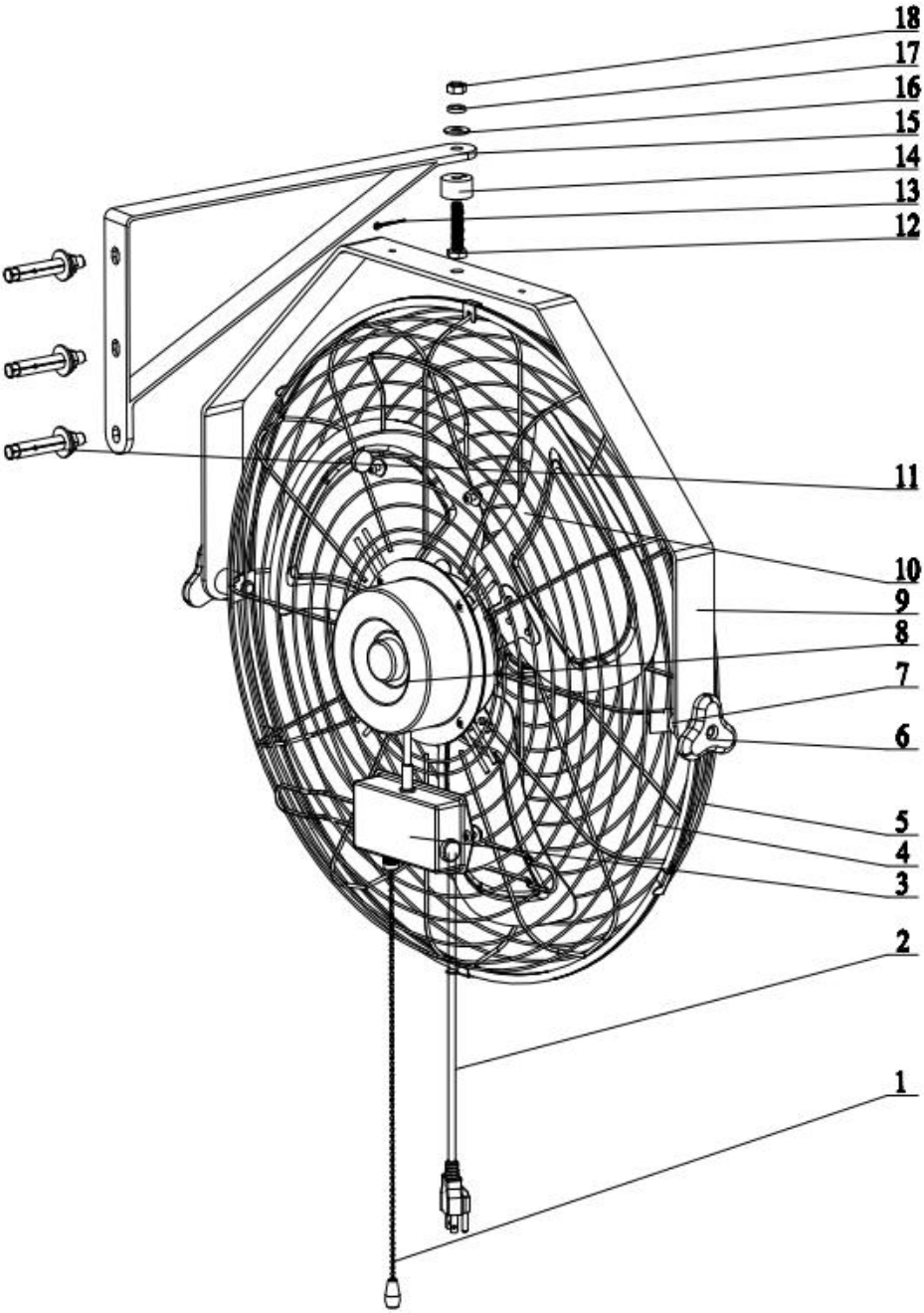
18
17
16
15
14
13
12
11
10
9
8
7
6
5
4
3
2
1

18	Hex Nut	1
17	Spring Washer	1
16	Flat Gasket	1
15	Triangular Wall-mounted Frame	1
14	Shock-absorbing Pad 2	1
13	Bolt	1
12	Hex Bolt	1
11	Expansion Screw	3
10	Fan Blade	1
9	Bracket	1
8	Motor	1
7	Shock-absorbing Pad 1	2
6	Hand Screw Nut	2
5	Front Grille	1
4	Rear Grille	1
3	Power Box	1
2	Power Cord	1
1	Zipper	1
Part No.	Part Name	Qty

VEVOR®

TOUGH TOOLS, HALF PRICE

Support and E-Warranty Certificate

https://www.vevor.com/support